HYUNDAI
MOTOR GROUP

HD SY Series

HD2200Y/2200SY | HD2600Y/2600SY | HD3100YA/SYA | HD3100Y/SY

HYUNDAI WIA Y-Axis Turning Center

HYUNDAI WIA | CREATING VALUE IN SEAMLESS MOBILITY

Technical Leader

The CNC Turning Center HD-SY Series, designed with HYUNDAI WIA's engineering expertise to maximize productivity by enhancing rigidity and accuracy of machining.

ITEM	Main Chuck			Sub Chuck		Bed (Z-Axis)		Mill Turret	
	8″	10″	12″	5″	6″	680mm (26.8″)	830mm (32.7″)	BMT55P	BMT65P
HD2200Y	●					●		●	
HD2200SY	●			●		●		●	
HD2600Y		●				●		●	
HD2600SY		●		●		●		●	
HD3100YA		●					●		●
HD3100SYA		●			●		●		●
HD3100Y			●				●		●
HD3100SY			●		●		●		●

●: Standard ○: Option

HD SY Series

Lathe with Y-axis & Box Guideways for Heavy Cutting

- Box guideways for heavy duty cutting
- 30° slanted one-piece bed structure for high rigidity
- Stabilized Unit Structure to minimize thermal displacement
- Integrated processing through synchronized control of Main/Sub spindle ('SY' Type)
- Multi-tasking operation with wedge type Y-axis BMT turret
- Excellent rapid traverse rate: 30m/min [1,181ipm] (Z-axis)
- Ergonomic design for convenient access to chuck and tool

Y-AXIS TURNING CENTER

APPLICATIONS & PARTS

WORM SHAFT

Reduced machining time by multi-tasking operation

HD-SY Series with Y-axis makes it possible to work high-valued product with integrated processing using sub spindle and various rotary tools in short time.

WHEEL HUB

COOLING ADAPTER

HUB SHAFT

DRIVE GEAR

01 BASIC STRUCTURE

Which Can Cover All Machining Process with Only One Initial Setting

Mill Turret

- BMT55P
  6,000 r/min, Ø16 (Ø5/8") {ER25}
- BMT65P
  5,000 r/min, Ø25 (Ø1") {ER32}

Sub Spindle

- 5" / 6,000 r/min
- 6" / 4,500 r/min
- C-Axis Control : 0.001°

High Precision Spindle

- Integral body & heat dissipating RIB structure.
- HD2200Y/SY : 8" / 4,000 r/min
- HD2600Y/SY : 10" / 3,500 r/min
- HD3100YA/SYA : 10" / 3,500 r/min
- HD3100Y/SY : 12" / 2,800 r/min
- C-Axis Control : 0.001°

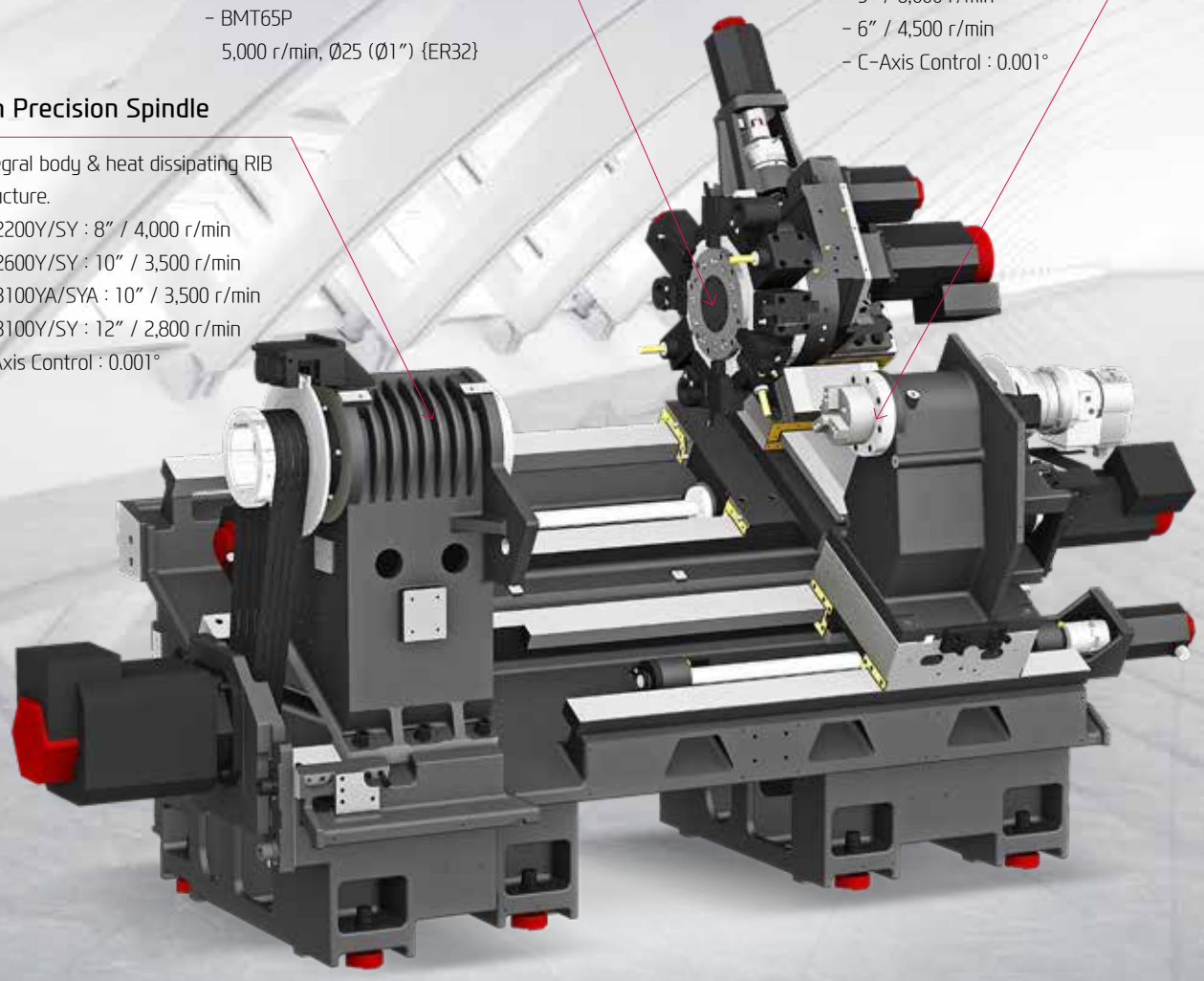

REDUCTION OF NON-CUTTING TIME BY FAST RAPID SPEED

ALL-IN-ONE TYPE OF BED

Optimal Structural Analysis

Structural analysis was applied to the design of the machine to increase the tool post body and reduce the machine's height so as to maintain the bed's dynamic rigidity even during heavy-duty cutting.

In addition, the HD-SY Series bed slope is pitched at 30 degrees to ensure more stable machining.

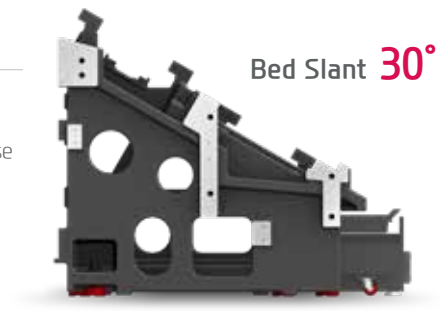

Integrated Coolant Tank

The structure is designed with the coolant tank installed at the bed front for improved convenience. Chips can be removed from the right side of the machine.

GUIDEWAY

Box Guideway

All axis of HD-SY Series are designed with Box Guideways for better travel ability. Box Guideways show great performance in offsetting vibrations caused by heavy duty cutting.

Sealed GIB Structure

X-axis of HD2200 is designed to minimize the damage of turcite from chips by applying the sealed GIB structure.

6-Face constraint design for improved travel capacity

Rapid Traverse Rate (X/Y/Z/ZB)

HD2200Y/SY, HD2600Y/SY	HD3100YA/SYA, HD3100Y/SY
24/10/30/24 m/min (945/394/1,181/945 ipm)	24/10/30/30 m/min (945/394/1,181/1,181 ipm)

Travel (X/Y/Z/ZB)

HD2200Y/SY, HD2600Y/SY	HD3100YA/SYA, HD3100Y/SY
215/110/680/680 mm (8.5"/4.3"/26.8"/26.8")	265/120/830/830 mm (10.4"/4.7"/32.7"/32.7")

02 Y-AXIS FUNCTION

The Y-Axis Function, Cutting for Complex Shaped Work-piece

HIGH PERFORMANCE Y-AXIS

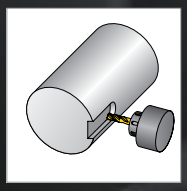

Keyway Milling

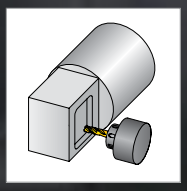

Multi-sided machining

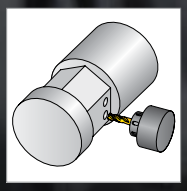

Eccentric hole machining

X+Y axis circular interpolation

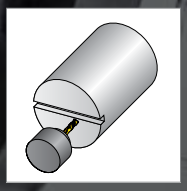

Fine Grooving

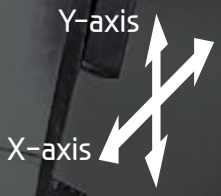

MACHINING PROCESS WITH ONLY ONE INITIAL SETTING

Y-AXIS

Wedge Type Y-Axis Structure

The HD-SY Series is designed with a wedge type Y-axis that is transferred by the simultaneous operation of the Ys-axis and the X-axis. In addtion, excellent rigidity makes it possible to perform superb quality when machining a heavy-duty cutting.

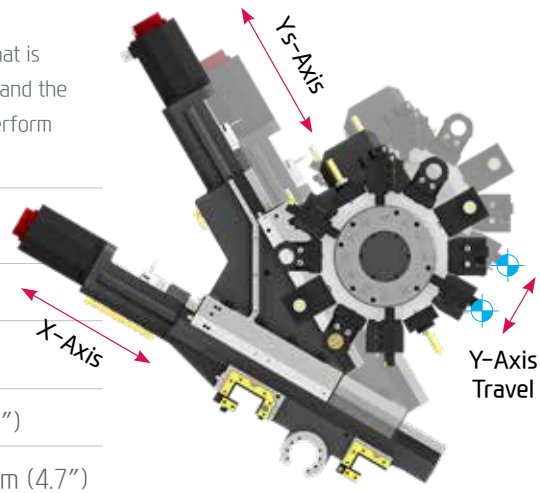

Y-axis Rapid Traverse Rate

10 m/min (394 ipm)

Y-axis Travel

HD2200Y/SY, HD2600Y/SY : 110 {±55} mm (4.3")

HD3100YA/SYA, HD3100Y/SY : 120 {±60} mm (4.7")

HD3100Y (12") Machining Capability

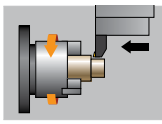

O.D Turning (Material : S45C)	
Machining Dia.	Ø172
Machining depth	7.5 mm
Spindle rpm	389 r/mim
Cutting speed	210 m/mim
Forwarding speed	0.55 mm/rev
Chip discharging amount	866 cc/min

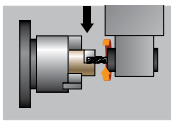

End Mill (Material : S45C)	
Tool Dia.	Ø20 mm
Spindle rpm	675 r/mim
Forwarding speed	0.15 mm/rev
Cutting speed	86 m/mim
Machining depth	10 mm
Machining thickness	20 mm

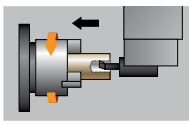

I.D Turning (Material : S45C)	
Tool Dia.	Ø76.4
Machining depth	10 mm
Spindle rpm	750 r/mim
Cutting speed	180 m/mim
Forwarding speed	0.12 mm/rev

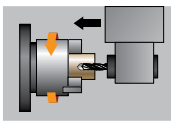

U-Drill (Material : S45C)	
Tool Dia.	Ø63
Machining depth	15 mm
Spindle rpm	1,011 r/mim
Cutting speed	200 m/mim
Forwarding speed	0.29 mm/rev

❖ The above result might be different by types of processing circumstances.

03 HIGH PRECISION SPINDLE

Long Lasting, High Accuracy & Excellent Performance CNC Turning Center

Spindle Specifications

[ ] : Option

ITEM	Spindle Speed	Motor (Max./Cont.)	Torque (Max./Cont.)	Type
HD2200Y/SY	4,000 (FANUC)	18.5/15 kW (25/20 HP)	206.2/125.4 N·m (152.1/92.5 lbf·ft)	BELT
	[4,000 (FANUC)	[18.5/15 kW (25/20 HP)]	[353.5/215 N·m (260.7/158.6 lbf·ft)]	
	[4,000 (SIEMENS)]	[22.5/15 kW (30/20 HP)	[215/143.3 N·m (158.6/105.7 lbf·ft)]	
HD2600Y/SY	3,500 (FANUC)	18.5/15 kW (25/20 HP)	400.7/243.7 N·m (295.5/179 lbf·ft)	
	[3,500 (SIEMENS)]	[23.8/17 kW (31.9/22.8 HP)]	[359.5/276.1 N·m (265.2/203.6 lbf·ft)]	
HD3100YA/SYA	3,500 (FANUC)	26/18.5 kW (35/25 HP)	734/522 N·m (541.4/385 lbf·ft)	
HD3100Y/SY	2,800 (FANUC)	26/18.5 kW (35/25 HP)	1,051/672 N·m (775.2/495.6 lbf·ft)	

HEAVY DUTY CUTTING & HIGH ACCURACY

SPINDLE

Spindle for Heavy Cutting

The main spindle is designed with the same structure as that often found in larger sized machines. The combination of double cylindrical roller bearings and angular contact ball bearings leads to excellent heavy duty cutting performance. Also, machining performance is enhanced by applying ribstar belt to minimize noise and belt slipping problems.

C-Axis Control

C-axis of HD-SY Series can be controlled to 0.001° which makes it possible to process various shapes.

Sub Spindle ('SY' Type)

The Belt-type sub spindle is designed to minimize thermal displacement during the continuous machining, offering from the heavy-duty cutting to the high-speed machining.

HD2200SY/2600SY	5″ (6,000 r/min)
HD3100SYA/3100SY	6″ (4,500 r/min)

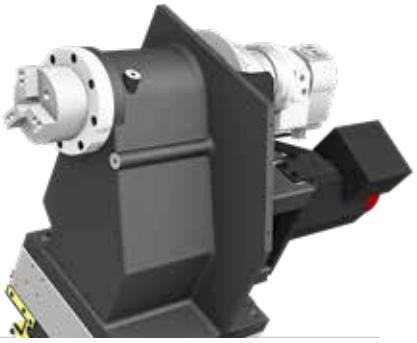

TAIL STOCK

The HD-Y series is fitted with tailstocks as a standard for excellent machining quality.
In addition, the travel distance of quill can be as long as 120mm(4.7″), thus expanding the support area.

HD2200Y/2600Y	MT#4 {Travel : 680 mm} (26.8″)
HD3100YA/3100Y	MT#5 {Travel : 830 mm) (32.7″)

04 BMT TURRET

High speed, High Accuracy, Highly Reliable Servo Turret

VARIOUS DRIVEN PRECISION BMT TOOL HOLDERS

TURRET

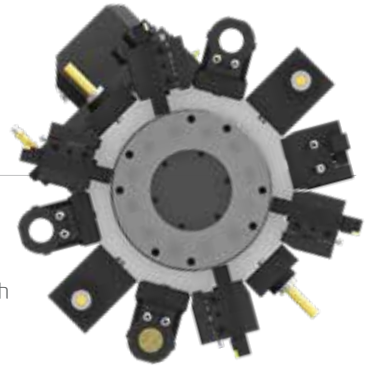

Mill Turret

The BMT turret secures the tool with four bolts and key on the tool mounting surface of the turret, making it possible to powerfully fix the tool, ensuring high reliability in rigidity and precision.

STRAIGHT MILLING HEAD	ANGULAR MILLING HEAD

Mill Tool Holder

Machining capability has increased with the addition of straight milling head tool holder, which can machine workpieces from the side, and angular milling head tool holder, which can perform I.D. operations.

BMT 55P (HD2200Y/SY | HD2600Y/SY)

- Speed (rpm) : 6,000 r/min
- Collet size : Ø16 (Ø5/8") {ER25}
- Indexing Time : 0.2 sec/step

BMT 65P (HD3100YA/SYA | HD3100Y/SY)

- Speed (rpm) : 5,000 r/min
- Collet size : Ø25 (Ø1") {ER32}
- Indexing Time : 0.2 sec/step

SPECIAL TOOL

OPTION

With the Y-axis, the HD-SY series can process high value-added products using a variety of rotating tools. In particular, there is a multi-holder for attaching a variety of tools to one holder, and an eccentric rotary tool for handling eccentric parts without additional axis travel, which can realize integration of process with one machine.

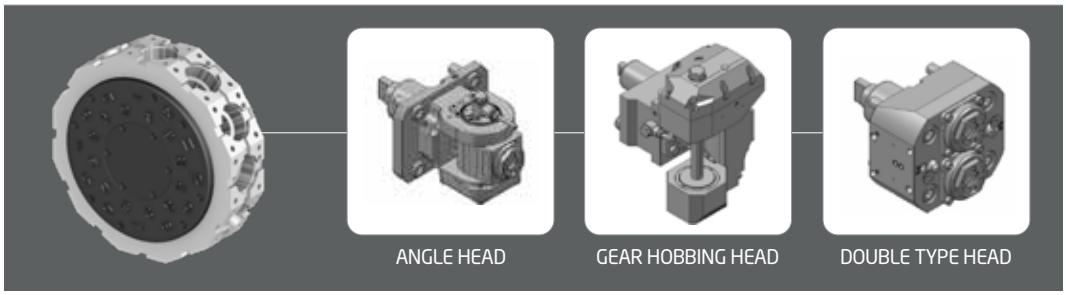

❖ Consultation needed when ordering these options.

05 USER CONVENIENCE

Various Devices for User Friendly

BAR FEEDER SYSTEM

Bar Feeder

Bar feeder system enables automation which leads to efficiency improvement.

Parts Catcher

An optional parts catcher collects finished parts without the need to open the door, adding productivity, especially when a bar feeder is attached.

Parts Conveyor

The parts conveyor transfers the finished workpiece unloaded by the parts catcher for user convenience.

Auto Door

Using M-code, the doors can be automatically opened and closed which brings productivity and convenience for automation.

Auto Shutter

Using auto shutter, automation system with gantry loader is possible without opening the machine's door.

HIGH PRECISION SYSTEM

Automatic Q-Setter

Cutting tools are calibrated quickly and accurately with the addition of a q-setter. Each tool tip is touched off manually using a sensor that inputs the position automatically.

Linear Scale

Linear scales increase positioning accuracy and reduce distortion caused by thermal growth, thus ensuring a more accurate finished part

Work Probe

Workpiece coordinate values can be set automatically using the optional spindle probe.

COOLANT UNIT

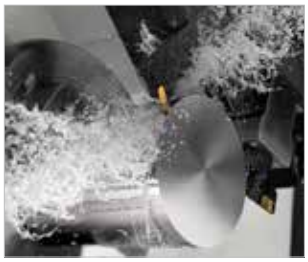

Standard Coolant (Nozzle)

Chuck Coolant (Upper Chuck)

Chuck Air Blow (Upper Chuck)

Gun Coolant

CHIP DISPOSAL SOLUTION

Chip Conveyor

Timely and effective disposal of chips will enhance productivity as well as the working environment.

Hinge	Chip Type : Roughing Chip, Long Chip, Chip complex	Material : SS41, 45C, Cast Steel	Front-Right Direction
	Highly efficient when disposing a lot of chips. Capable of handling stringy chips..		
Scraper	Chip Type : Finely broken chip blown out	Material : cast Iron, Nonferrous	
	Convenient for shortly cut chips.		
❖ Drum Filter	Chip Type : Powder, Micro Chip	Material : AL	
	Advantageous in precision, as the chips do not flow in to the coolant nozzle.		

❖ When ordering a drum filter chip conveyor, prior consult with hyudai wia's sales person.

06 HYUNDAI WIA FANUC – SMART PLUS

The Compatible All-round Control

15″ Touch-type Monitor as a standard

Smart Machine Control	Fast Cycle Time Technology
	Fine Surface Technology
	Smart Servo Control Technology
Conversational Program	SmartGuide-i
i-HMI	Machining-aid Function
Part Program Storage	5120M (2MB)
No. of Registerable Programs	1000 EA

Servo Learning Oscilliation Function for ChipBreaking OPTION

- Machining Method : he tool cuts the workpiece moving in a zigzag pattern. (Oscillating) → Air cut section occurs → Long chips break
- Advantage : Increase tool life, Enhance surface finishing, Improve chip disposal
- Machine : All turning centers with FANUC controller (Option)

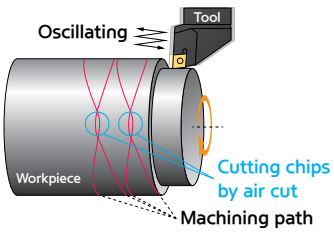

(Developed special screen page for servo learning oscilliation function / Even when this function is applied, the cycle time remains same.)

MMS (Machine Monitoring System)

MMS Cloud

A cloud server-based equipment monitoring system for collecting and analyzing facility operation data.

Manufacturing big data solution with design, manufacturing, and intelligence technology of HYUNDAI-WIA
(Big data collection/Analysis/Visualization)

SMART CNC (FANUC SMART PLUS)

1. Dialogue Program (Smart Guide-i)

This software offers the maximum user convenience through dialogue manipulation from setup to processing. This includes writing processing programs and simulation checks.

2. LAUNCHER

This software offers shortcuts for quick access to specialized features and frequently used features.

SPECIFICATIONS

Standard & Optional

● : Standard ○ : Option ☆ : Prior Consultation – : Non Applicable

Spindle		HD2200Y/SY	HD2600Y/SY
Main Spindle Hollow Chuck 3 Jaw	8″	●	–
	10″	–	●
Main Spindle Solid Chuck 3 Jaw	8″	–	–
	10″	–	–
Sub SP. Hollow Chuck 3 Jaw	5″	–/●	–/●
Sub Sp. Solid Chuck 3 Jaw	5″	–	–
Standard Soft Jaw (1set)		●	●
Chuck Clamp Foot Switch		●	●
2 Steps Hyd, Pressure Device		○	○
Spindle Inside Stopper		☆	☆
Cs-Axis (0.001°)		●	●
Chuck Open/Close Confirmation Device		●	●
2 Steps Chuck Foot Switch		○	○
Sub Spindle Foot Switch		–/●	–/●
Turret			
Tool Holder		●	●
Mill Turret	BMT	●	●
	12 Tool	●	●
	24 Tool	○	○
Straight Milling Head	Collet Type, 2ea	●	●
Angular Milling Head	Collet Type, 2ea	●	●
Straight Milling Head	Adapter Type	○	○
Angular Milling Head	Adapter Type	○	○
Boring Sleeve		●	●
Drill Socket		○	○
U-Drill Holder		●	●
U-Drill Holder Sleeve		●	●
Angle Head		☆	☆
Tail Stock & Steady Rest			
Quill Tail Stock	MT#4	●/–	●/–
	MT#5	–	–
Built-in Tail Stock		○/–	○/–
Programmable Tail Stock		○/–	○/–
Manual Hyd. Steady Rest		–	–
Standard Live Center		●/–	●/–
High Precesion Live Center		☆/–	☆/–
2 Steps Tail Stock Pressure System		☆/–	☆/–
Quill Forward/Reverse Confirmation Device		○/–	○/–
Tail Stock Foot Switch		○/–	○/–
Coolant & Air Blow			
Standard Coolant (Nozzle)		●	●
Chuck Coolant (Upper Chuck)		○	○
Gun Coolant		○	○
Through Spindle Coolant (Only for Special Chuck)		☆	☆
Turnmill Through Coolant		–	–
Chuck Air Blow	Main SP.	○	○
	Sub SP.	–/○	–/○
Tail Stock Air Blow (Upper Tail Stock)		○/–	○/–
Turret Air Blow		☆	☆
Air Gun		○	○
Through Spindle Air Blow (Only for Special Chuck)		–	–
High Pressure Coolant	0.5Bar	●	●
	6Bar	○	○
	20Bar	○	○
	70Bar	○	○
Power Coolant System (For Automation)		☆	☆
Coolant Chiller (When selecting Sub Tank Type, Chip Conveyor)		–	–
Chip Disposal			
Coolant Tank	Right	●	●
	Rear	☆	☆
Chip Conveyor (Hinge/Scraper)	Front (Right)	○	○
	Rear (Rear)	☆	☆
Special Chip Conveyor (Drum Filter)		–	–
Chip Wagon	Standard (180 ℓ [47.5 gal])	○	○
	Swing (200 ℓ [52.8 gal])	○	○
	Large Size (330 ℓ [87.2 gal])	○	○
	Customized	☆	☆
Safety Device			
Fornt Door Interlock		●	●
Total Splash Guard		●	●
Chuck Hydraulic Pressure Maintenance Interlock		☆	☆

Electric Device		HD2200Y/SY	HD2600Y/SY
Call Light	1Color : ■	●	●
Call Light & Buzzer	3Color : ■ ■ ■ B	○	○
Electric Cabinet Light		○	○
Remote MPG		○	○
Work Counter	Digital	○	○
Total Counter	Digital	○	○
Tool Counter	Digital	○	○
Multi Tool Counter	6EA	○	○
	9EA	○	○
Electric Circuit Breaker	FANUC	○	○
	SIEMENS	–	–
AVR (Auto Voltage Regulator)		☆	☆
Transformer	30kVA	○/–	○/–
	35kVA	–/○	–/○
Auto Power Off		○	○
Measurement			
Manual Q-Setter (Basic)		○	○
Manual Q-Setter (Renishaw)		○	○
Automatic Q-Setter (Renishaw)		○	○
Work Close Confirmation Device (Only for Special Chuck)	TACO	○	○
	SMC	○	○
Work Setter		○	○
Linear Scale	X/Y/Z axis	○	○
Coolant Level Sensor (Only for Chip Conveyor)		☆	☆
Environment			
Air Conditioner		○	○
Dehumidifier		○	○
Oil Mist Collector		☆	☆
Oil Skimmer (Only for Chip Conveyor)		○	○
MQL (Minimal Quantity Lubrication)		☆	☆
Fixture & Automation			
Auto Door		○	○
Auto Shutter (Only for Automatic System)		☆	☆
Sub Operation Pannel		☆	☆
Bar Feeder Interface		○	○
Bar Feeder		☆	☆
Work Pusher (Spring Type)		○	○
Work Ejector (Pneumatic Type)		☆	☆
Extra M-Code 4ea		○	○
Automation Interface		☆	☆
I/O Extension (IN & OUT)	16 Contact	○	○
	32 Contact	○	○
Parts Catcher	Main SP.	○	○
	Sub SP.	–/○	–/○
Turret Work Pusher (For Automation)		☆	☆
Parts Conveyor (Required Main Parts Catcher)		☆	☆
Semi Automation System		☆	☆
Hyd. Device			
Standard Hyd. Cylinder	Hollow	●	●
Standard Hyd. Unit	35bar(507.6psi) / 30 ℓ (7.9gal)	●	●
S/W			
Dialogue Program (HW-DPRO) : FANUC		○	○
DNC software (HW-eDNC)		○	○
Machine Monitoring System (HW-MMS Cloud)		☆	☆
Smart Guide-i : FANUC		●	●
Smart S/W		☆	☆
ETC			
Tool Box		●	●
Customized Color	Need Munsel No.	☆	☆
CAD & CAM		☆	☆

❖ Thermal Displacement Compensation device is recommended, when more than 6 bar of high pressure coolant is applied, for the high quality machining.

Specifications are subject to change without notice for improvement. / Please refer to the S/W catalog (iRiS) for details by S/W product.

SPECIFICATIONS

Standard & Optional

● : Standard ○ : Option ☆ : Prior Consultation – : Non Applicable

Spindle		HD3100YA/SYA	HD3100Y/SY
Main Spindle Hollow Chuck 3 Jaw	10"	●	–
	12"	–	●
Main Spindle Solid Chuck 3 Jaw	10"	–	–
	12"	–	–
Sub SP. Hollow Chuck 3 Jaw	6"	–/●	–/●
Sub Sp. Solid Chuck 3 Jaw	6"	–	–
Standard Soft Jaw (1set)		●	●
Chuck Clamp Foot Switch		●	●
2 Steps Hyd, Pressure Device		○	○
Spindle Inside Stopper		☆	☆
Cs-Axis (0.001°)		●	●
Chuck Open/Close Confirmation Device		●	●
2 Steps Chuck Foot Switch		○	○
Sub Spindle Foot Switch		–/●	–/●
Turret			
Tool Holder		●	●
Mill Turret	BMT	●	●
	12 Tool	●	●
	24 Tool	–	–
Straight Milling Head	Collet Type, 2ea	●	●
Angular Milling Head	Collet Type, 2ea	●	●
Straight Milling Head	Adapter Type	○	○
Angular Milling Head	Adapter Type	○	○
Boring Sleeve		●	●
Drill Socket		○	○
U-Drill Holder		●	●
U-Drill Holder Sleeve		●	●
Angle Head		☆	☆
Tail Stock & Steady Rest			
Quill Tail Stock	MT#4	–	–
	MT#5	●/–	●/–
Built-in Tail Stock		○/–	○/–
Programmable Tail Stock		○/–	○/–
Manual Hyd. Steady Rest		–	–
Standard Live Center		●/–	●/–
High Precesion Live Center		☆/–	☆/–
2 Steps Tail Stock Pressure System		☆/–	☆/–
Quill Forward/Reverse Confirmation Device		○/–	○/–
Tail Stock Foot Switch		○/–	○/–
Coolant & Air Blow			
Standard Coolant (Nozzle)		●	●
Chuck Coolant (Upper Chuck)		○	○
Gun Coolant		○	○
Through Spindle Coolant (Only for Special Chuck)		☆	☆
Turnmill Through Coolant		–	–
Chuck Air Blow	Main SP.	○	○
	Sub SP.	–/○	–/○
Tail Stock Air Blow (Upper Tail Stock)		–	○
Turret Air Blow		☆	☆
Air Gun		○	○
Through Spindle Air Blow (Only for Special Chuck)		–	–
High Pressure Coolant	0.5Bar	●	●
	6Bar	○	○
	20Bar	○	○
	70Bar	○	○
Power Coolant System (For Automation)		☆	☆
Coolant Chiller (When selecting Sub Tank Type, Chip Conveyor)		–	–
Chip Disposal			
Coolant Tank	Right	●	●
	Rear	☆	☆
Chip Conveyor (Hinge/Scraper)	Front (Right)	○	○
	Rear (Rear)	☆	☆
Special Chip Conveyor (Drum Filter)		–	–
Chip Wagon	Standard (180 ℓ [47.5 gal])	○	○
	Swing (200 ℓ [52.8 gal])	○	○
	Large Size (330 ℓ [87.2 gal])	○	○
	Customized	☆	☆
Safety Device			
Fornt Door Interlock		●	●
Total Splash Guard		●	●
Chuck Hydraulic Pressure Maintenance Interlock		☆	☆

Electric Device		HD3100YA/SYA	HD3100Y/SY
Call Light	1Color : ■	●	●
Call Light & Buzzer	3Color : ■ ■ ■B	○	○
Electric Cabinet Light		○	○
Remote MPG		○	○
Work Counter	Digital	○	○
Total Counter	Digital	○	○
Tool Counter	Digital	○	○
Multi Tool Counter	6EA	○	○
	9EA	○	○
Electric Circuit Breaker		○	○
AVR (Auto Voltage Regulator)		☆	☆
Transformer	30kVA	○/–	○/–
	39kVA	–/○	–/○
Auto Power Off		○	○
Measurement			
Manual Q-Setter (Basic)		○	○
Manual Q-Setter (Renishaw)		○	○
Automatic Q-Setter (Renishaw)		○	○
Work Close Confirmation Device (Only for Special Chuck)	TACO	☆	☆
	SMC	☆	☆
Work Setter		☆	☆
Linear Scale	X/Y/Z axis	☆	☆
Coolant Level Sensor (Only for Chip Conveyor)		☆	☆
Environment			
Air Conditioner		○	○
Dehumidifier		○	○
Oil Mist Collector		☆	☆
Oil Skimmer (Only for Chip Conveyor)		○	○
MQL (Minimal Quantity Lubrication)		☆	☆
Fixture & Automation			
Auto Door		○	○
Auto Shutter (Only for Automatic System)		☆	☆
Sub Operation Pannel		☆	☆
Bar Feeder Interface		○	○
Bar Feeder		☆	☆
Work Pusher (Spring Type)		○	○
Work Ejector (Pneumatic Type)		☆	☆
Extra M-Code 4ea		○	○
Automation Interface		☆	☆
I/O Extension (IN & OUT)	16 Contact	○	○
	32 Contact	○	○
Parts Catcher	Main SP.	○	○
	Sub SP.	–/○	–/○
Turret Work Pusher (For Automation)		☆	☆
Parts Conveyor (Required Main Parts Catcher)		☆	☆
Semi Automation System		☆	☆
Hyd. Device			
Standard Hyd. Cylinder	Hollow	●	●
Standard Hyd. Unit	35bar(507.6psi) / 30 ℓ (7.9gal)	●	●
S/W			
Dialogue Program (HW-DPRO) : FANUC		○	○
DNC software (HW-eDNC)		○	○
Machine Monitoring System (HW-MMS Cloud)		☆	☆
Smart Guide-i : FANUC		●	●
Smart S/W		☆	☆
ETC			
Tool Box		●	●
Customized Color	Need Munsel No.	☆	☆
CAD & CAM		☆	☆

❖ Thermal Displacement Compensation device is recommended, when more than 6 bar of high pressure coolant is applied, for the high quality machining.

Specifications are subject to change without notice for improvement. / Please refer to the S/W catalog (iRiS) for details by S/W product.

SPECIFICATIONS

Spindle Output/Torque Diagram

HD2200Y 4,000 rpm

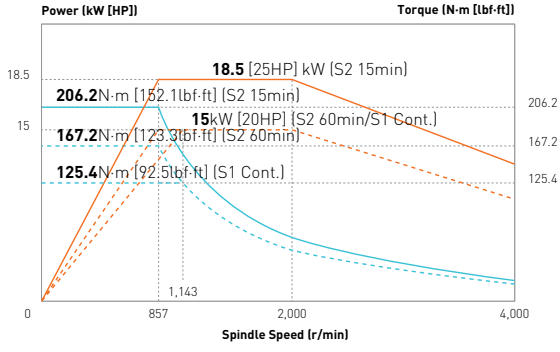

HD2200Y 4,000 rpm (SIEMENS)

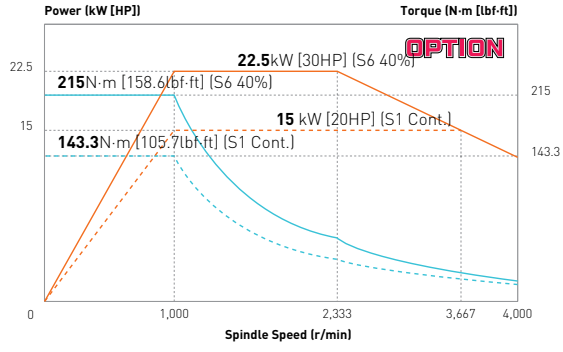

HD2200Y 4,000 rpm (Power Up)

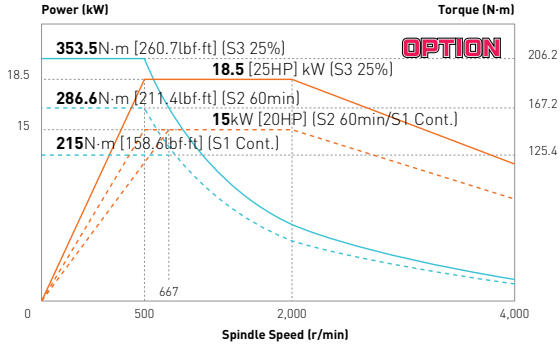

HD2600Y 3,500 rpm

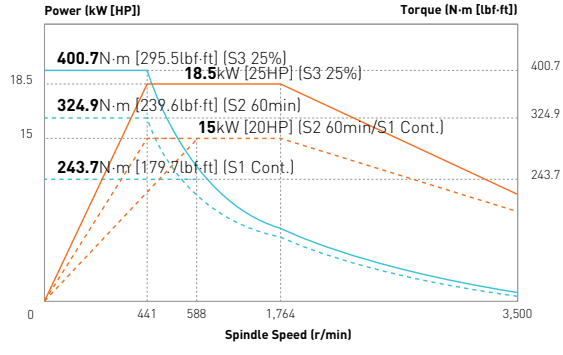

HD2600Y 3,500 rpm (SIEMENS)

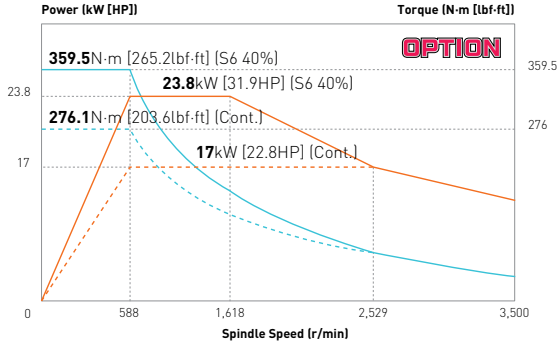

HD3100YA/SYA 3,500 rpm

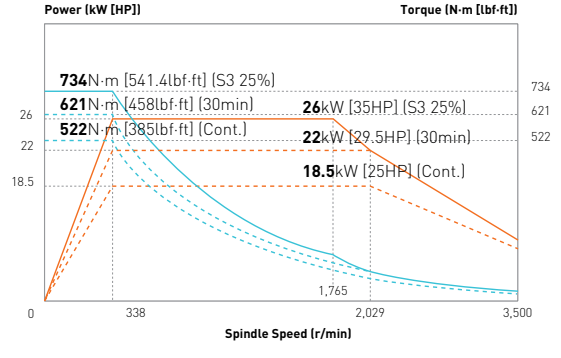

HD3100Y/SY 2,800 rpm

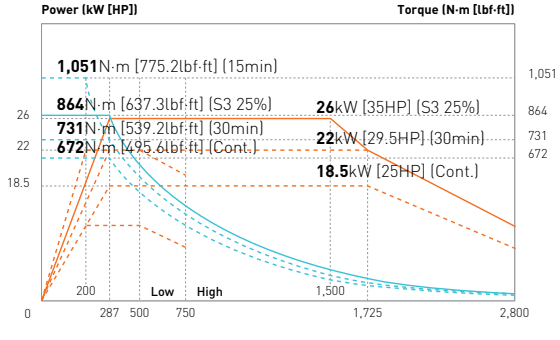

Spindle Output/Torque Diagram

5″ Sub Spindle 6,000 rpm

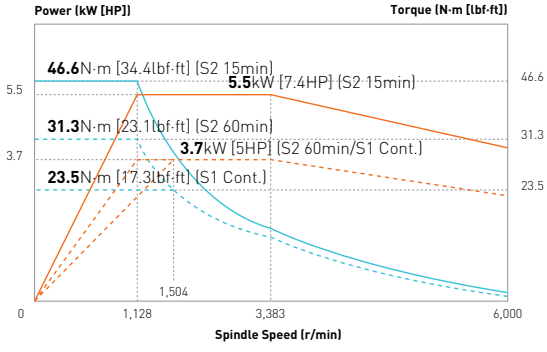

5″ Sub Spindle 6,000 rpm (SIEMENS)

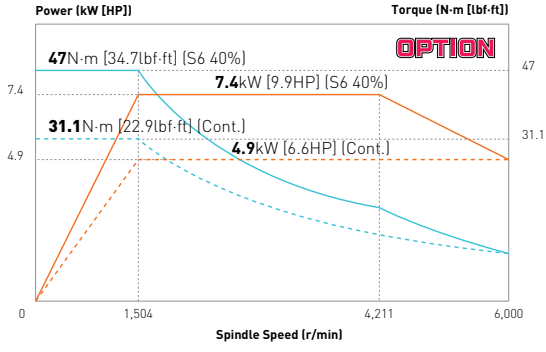

6″ Sub Spindle 4,500 rpm

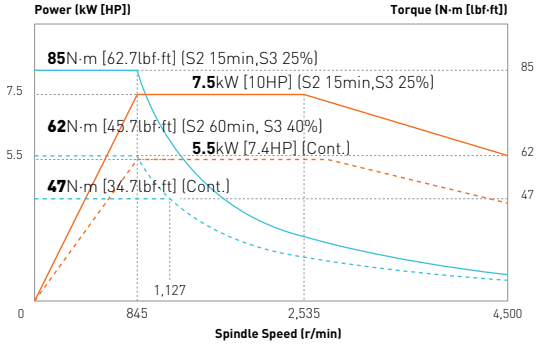

BMT55P 6,000 rpm

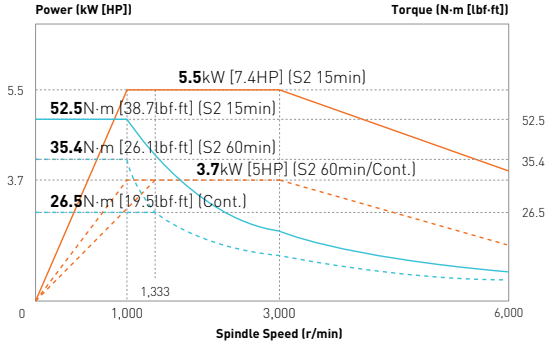

BMT55P 6,000 rpm (SIEMENS)

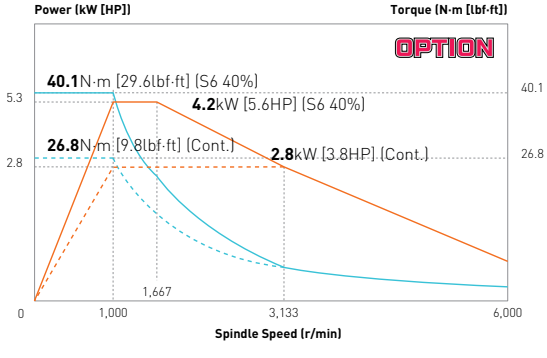

BMT65P 5,000 rpm

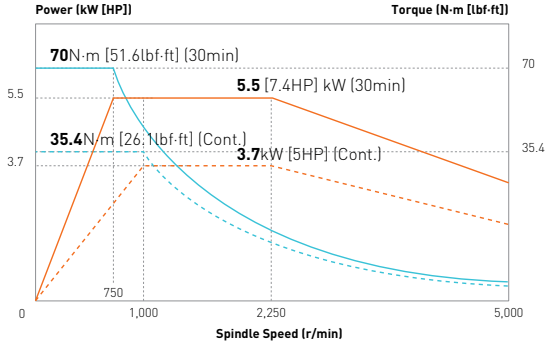

SPECIFICATIONS

External Dimensions

unit : mm(in)

HD2200Y/SY
HD2600Y/SY

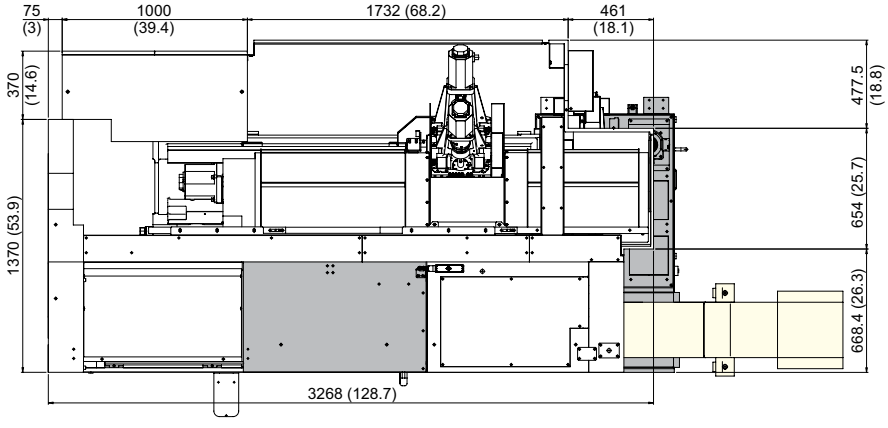

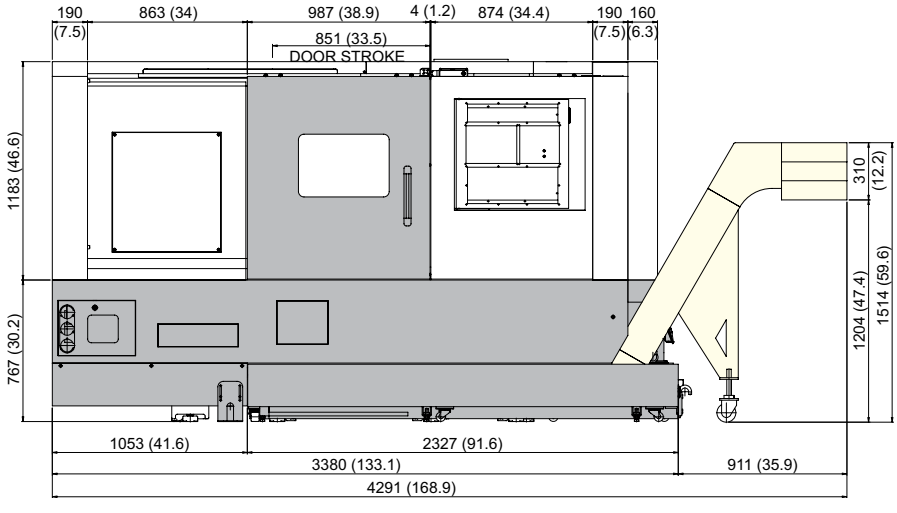

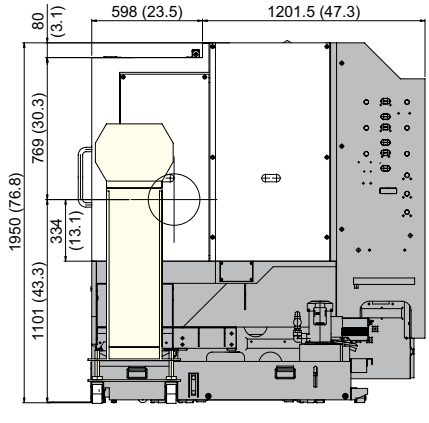

External Dimensions

unit : mm(in)

HD3100YA/SYA
HD3100Y/SY

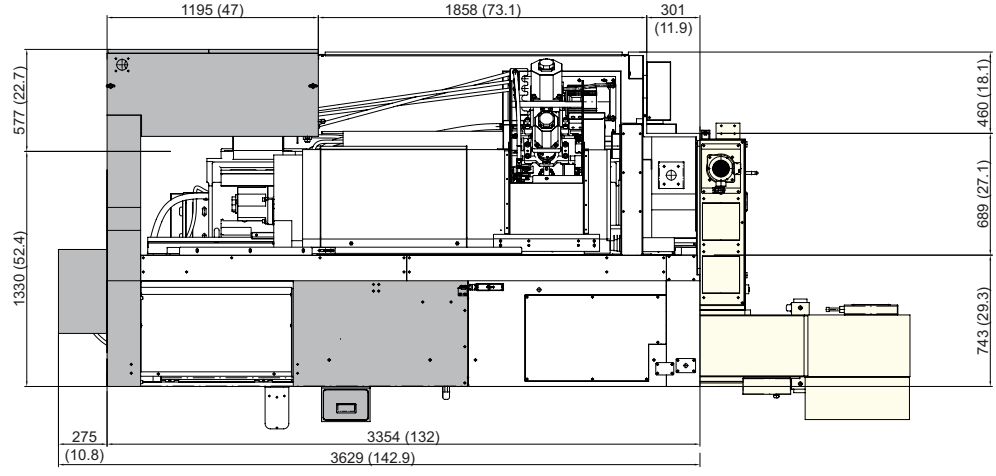

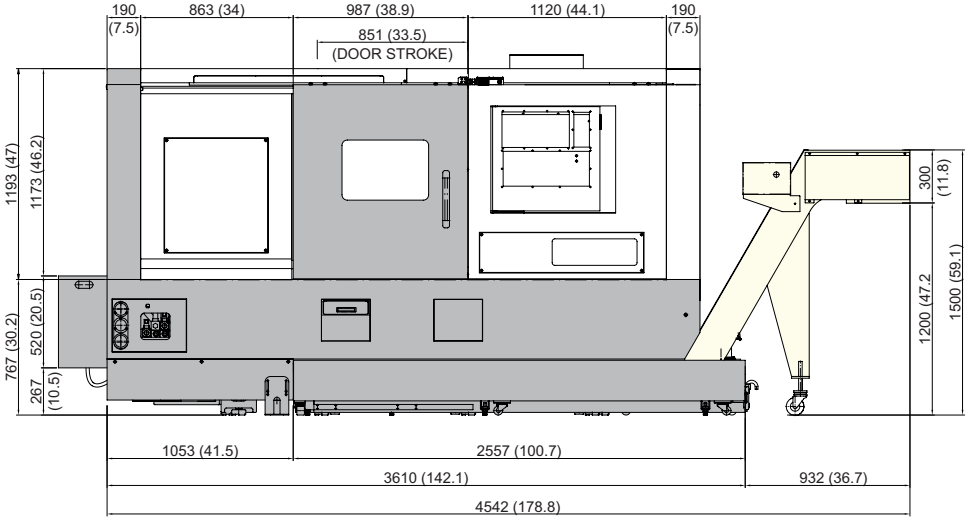

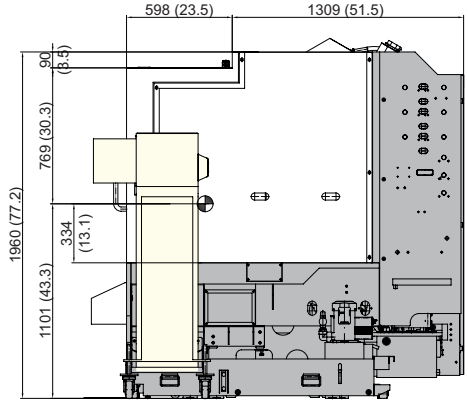

SPECIFICATIONS

Interference

unit : mm(in)

HD2200Y
HD2600Y

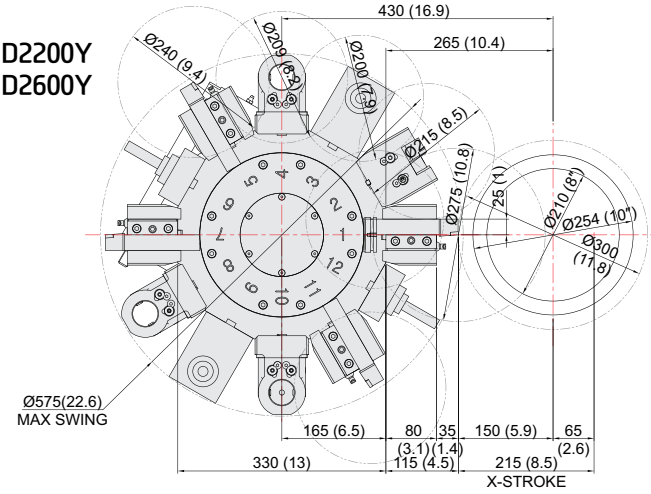

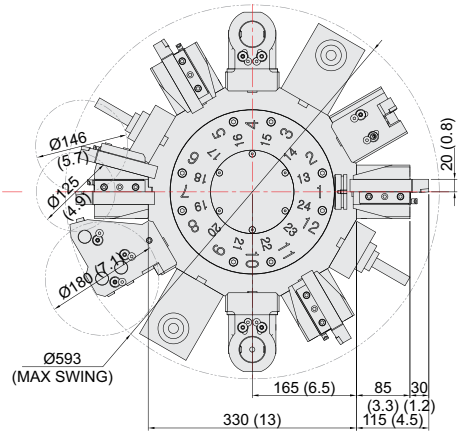

24 Station (Opt.)

HD2200SY
HD2600SY

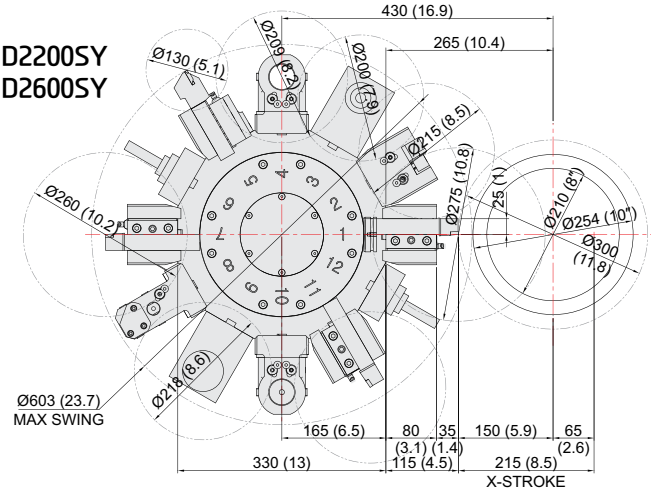

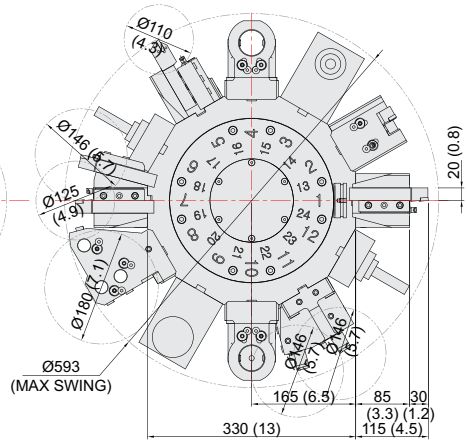

24 Station (Opt.)

Y-axis Travel Range

unit : mm(in)

ANGULAR

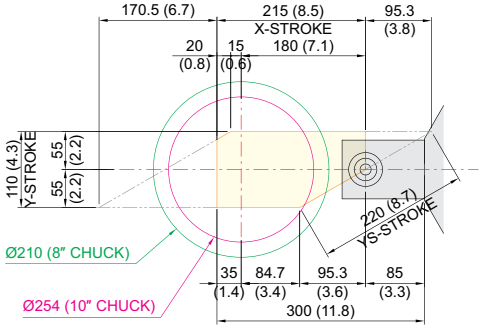

STRAIGHT

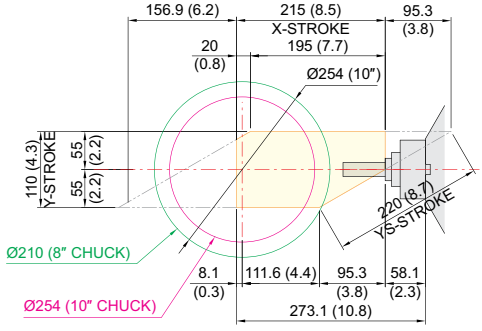

SPECIFICATIONS

Interference

unit : mm(in)

HD3100SYA
HD3100SY

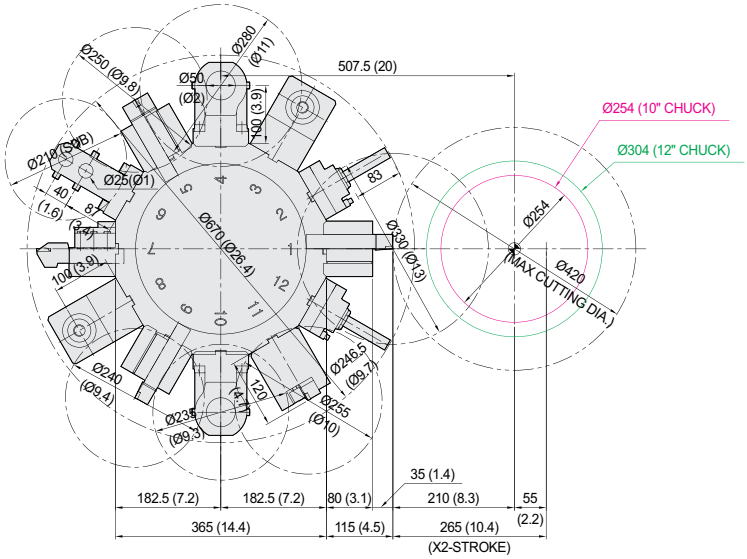

HD3100YA
HD3100Y

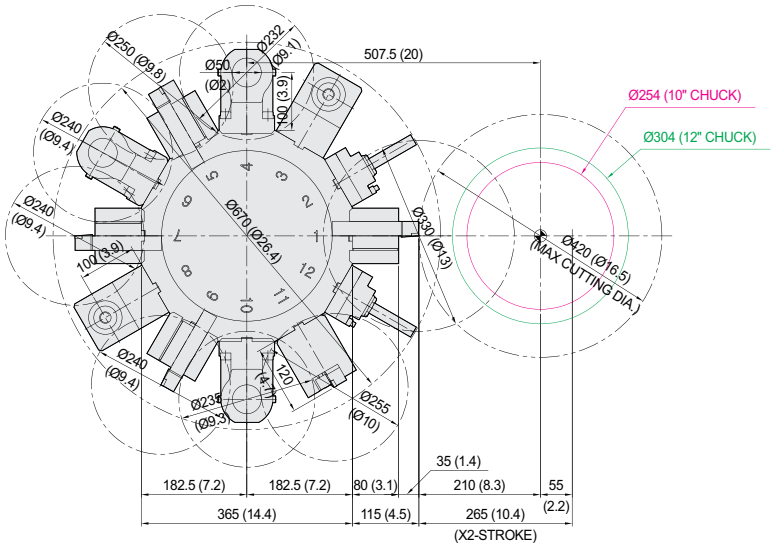

Y-axis Travel Range

unit : mm(in)

ANGULAR

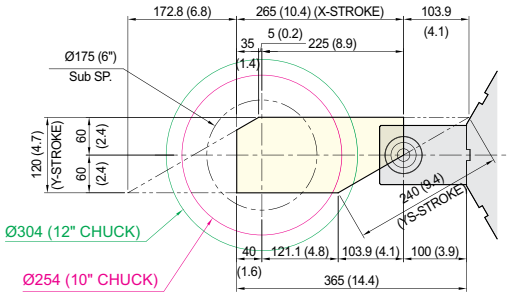

STRAIGHT

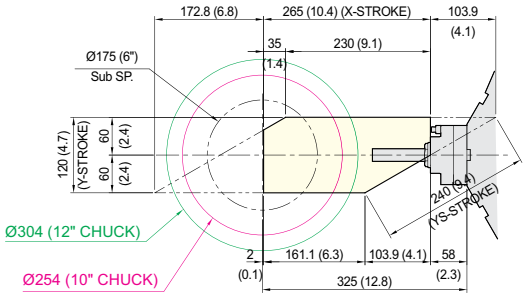

SPECIFICATIONS

Tooling System

unit : mm(in)

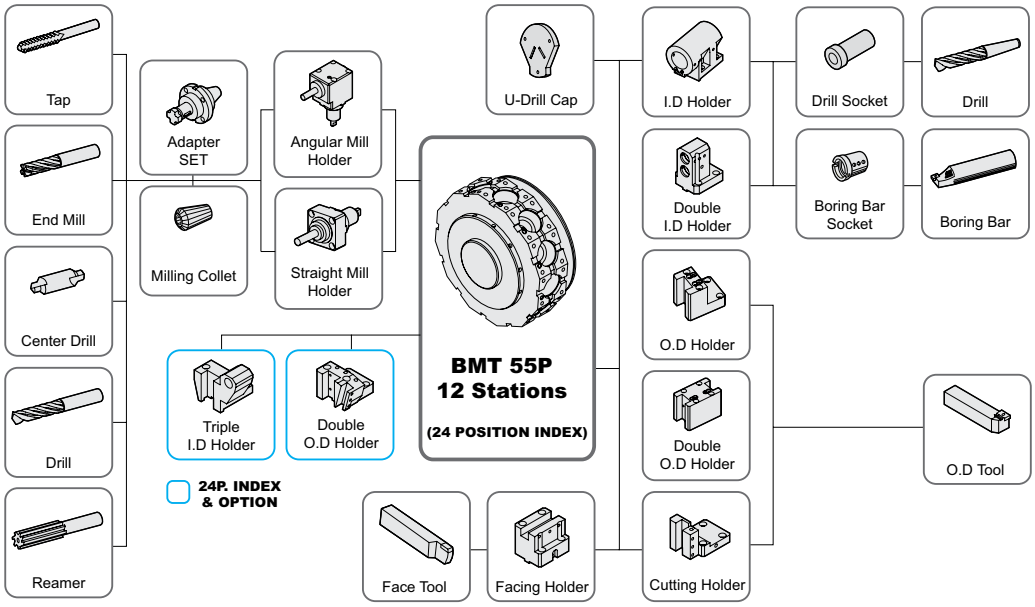

HD2200Y | HD2600Y Tooling Parts Detail

ITEM			Y Type (12P)		Y Type (24P : Opt.)	
			mm Unit	inch Unit	mm Unit	inch Unit
Turning Holder	O.D Holder	Right/Left	4	4	3	3
		Double	-	-	-	-
		Double (24P, Main)	-	-	1	1
		Double (24P, Sub)	-	-	-	-
	Facing Holder		1	1	1	1
	Cutting Holder		-	-	-	-
Boring Holder	I.D Holder	Single	3	3	2	2
		Double	-	-	-	-
		Triple	-	-	1	1
	U-Drill Holder	Cap	1	1	1	1
Driven Holder	Straight Mill Holder	Standard	2	2	2	2
	Angular Mill Holder	Standard	2	2	2	2
Socket	Boring	Ø10 (Ø3/8")	1	1	1	1
		Ø12 (Ø1/2")	1	1	1	1
		Ø16 (Ø5/8")	1	1	1	1
		Ø20 (Ø3/4")	1	1	1	1
		Ø25 (Ø1")	1	1	1	1
		Ø32 (Ø1 1/4")	1	1	1	1
	Sub Boring	Ø8 (5/16")	-	-	-	-
		Ø12 (1/2")	-	-	-	-
		Ø16 (5/8")	-	-	-	-
	Drill	MT 2	-	-	-	-
		MT 3	-	-	-	-
		MT 4	-	-	-	-
	ER Collet		1 Set	1 Set	1 Set	1 Set
	Adapter Set		Opt.	Opt.	Opt.	Opt.

Specifications are subject to change without notice for improvement.

SPECIFICATIONS

Tooling System

unit : mm(in)

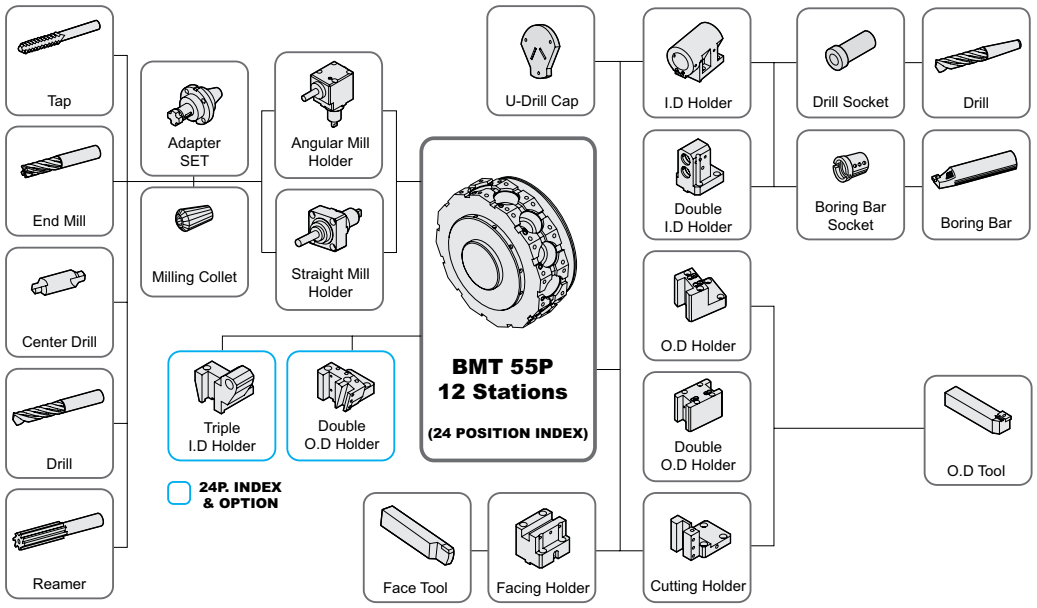

HD2200SY | HD2600SY Tooling Parts Detail

ITEM			SY Type (12P)		SY Type (24P : Opt.)	
			mm Unit	inch Unit	mm Unit	inch Unit
Turning Holder	O.D Holder	Right/Left	2	2	2	2
		Double	1	1	–	–
		Double (24P, Main)	–	–	1	1
		Double (24P, Sub)	–	–	1	1
	Facing Holder		1	1	1	1
	Cutting Holder		1	1	1	1
Boring Holder	I.D Holder	Single	2	2	2	2
		Double	1	1	–	–
		Triple	–	–	1	1
	U-Drill Holder	Cap	1	1	1	1
Driven Holder	Straight Mill Holder	Standard	2	2	2	2
	Angular Mill Holder	Standard	2	2	2	2
Socket	Boring	Ø10 (Ø3/8")	1	1	1	1
		Ø12 (Ø1/2")	1	1	1	1
		Ø16 (Ø5/8")	1	1	1	1
		Ø20 (Ø3/4")	1	1	1	1
		Ø25 (Ø1")	1	1	1	1
		Ø32 (Ø1 1/4")	1	1	1	1
	Sub Boring	Ø8 (5/16")	1	1	1	1
		Ø12 (1/2")	1	1	1	1
		Ø16 (5/8")	1	1	1	1
	Drill	MT 2	–	–	–	–
		MT 3	–	–	–	–
		MT 4	–	–	–	–
	ER Collet		1 Set	1 Set	1 Set	1 Set
	Adapter Set		Opt.	Opt.	Opt.	Opt.

Specifications are subject to change without notice for improvement.

SPECIFICATIONS

Tooling System

unit : mm(in)

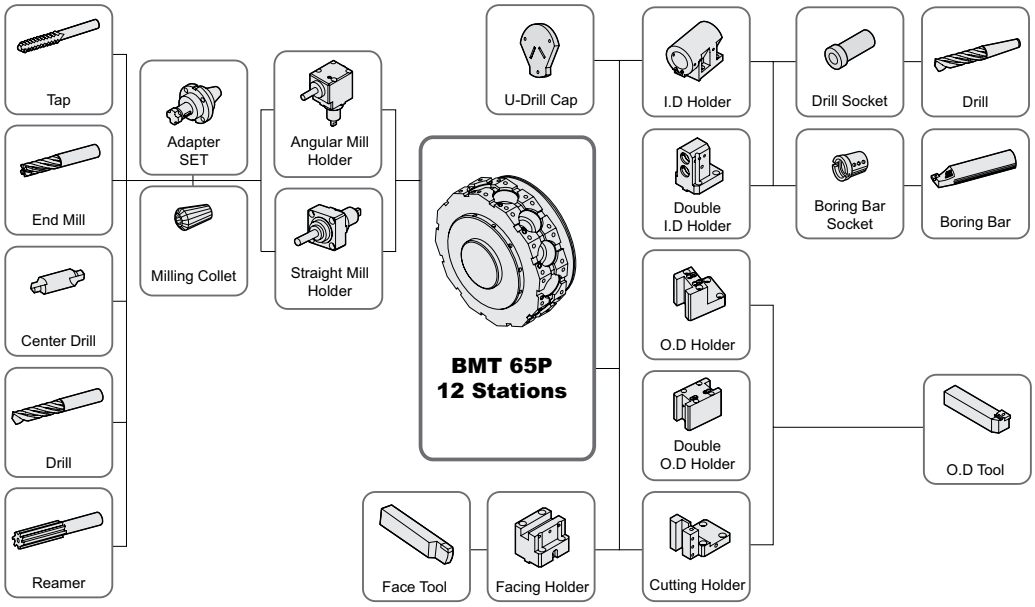

HD3100YA/SYA | HD3100Y/SY Tooling Parts Detail

ITEM			Y Type (12P)		SY Type (12P)	
			mm Unit	inch Unit	mm Unit	inch Unit
Turning Holder	O.D Holder	Right/Left	4	4	2	2
		Double	–	–	1	1
		Double (24P, Main)	–	–	–	–
		Double (24P, Sub)	–	–	–	–
	Facing Holder		1	1	1	1
	Cutting Holder		–	–	1	1
Boring Holder	I.D Holder	Single	3	3	2	2
		Double	–	–	1	1
		Triple	–	–	–	–
	U-Drill Holder	Cap	1	1	1	1
Driven Holder	Straight Mill Holder	Standard	2	2	2	2
	Angular Mill Holder	Standard	2	2	2	2
Socket	Boring	Ø12 (Ø3/8")	1	1	1	1
		Ø16 (Ø5/8")	1	1	1	1
		Ø20 (Ø3/4")	1	1	1	1
		Ø25 (Ø1")	1	1	1	1
		Ø32 (Ø1 1/4")	1	1	1	1
		Ø40 (Ø1 1/2")	1	1	1	1
	Sub Boring	Ø12 (Ø3/8")	–	–	1	1
		Ø16 (Ø5/8")	–	–	1	1
		Ø20 (Ø3/4")	–	–	1	1
	Drill	MT 2	Opt.	Opt.	Opt.	Opt.
		MT 3	Opt.	Opt.	Opt.	Opt.
		MT 4	Opt.	Opt.	Opt.	Opt.
	ER Collet		1 Set	1 Set	1 Set	1 Set
	Adapter Set		Opt.	Opt.	Opt.	Opt.

Specifications are subject to change without notice for improvement.

Tooling Travel Range

unit : mm(in)

HD2200Y

O.D. Tool holder

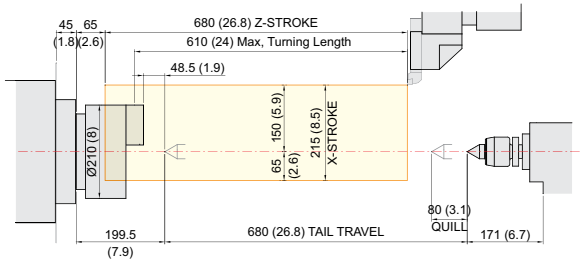

I.D. Tool holder

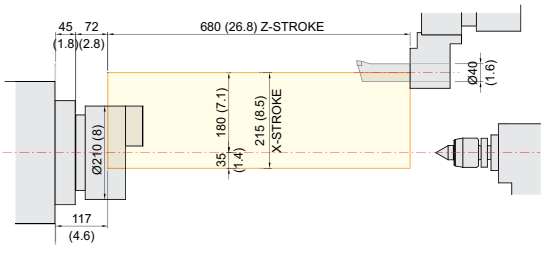

Straight Mill Holder

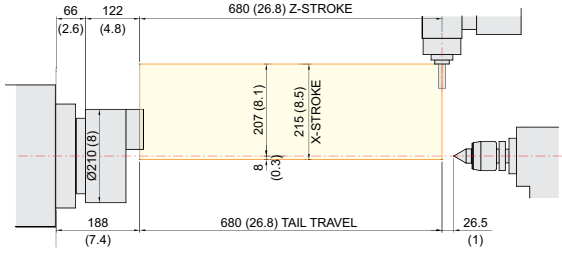

Angular Mill Holder

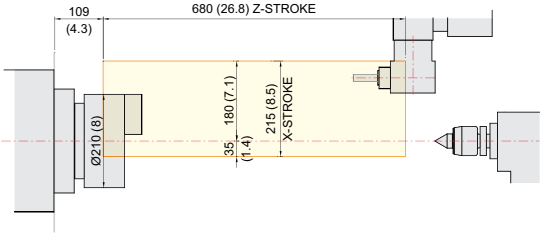

Face Tool holder

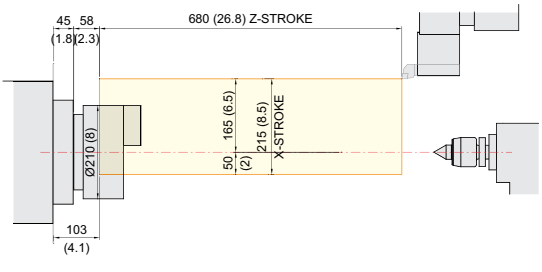

SPECIFICATIONS

Tooling Travel Range

unit : mm(in)

HD2200SY

O.D. Tool holder

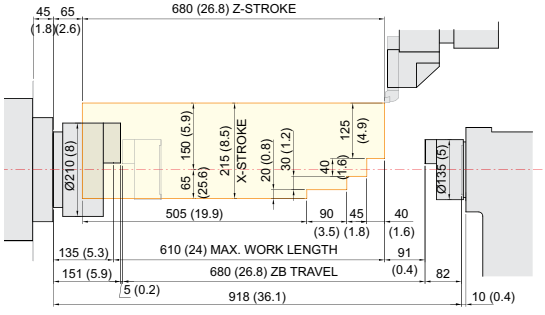

I.D. Tool holder

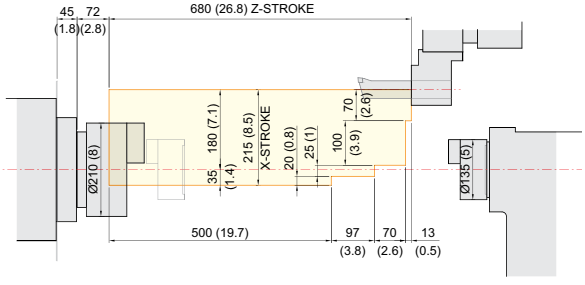

Straight Mill Holder

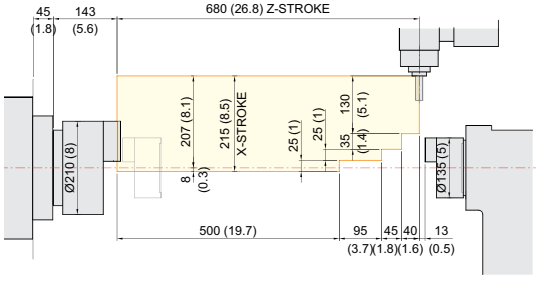

Angular Mill Holder

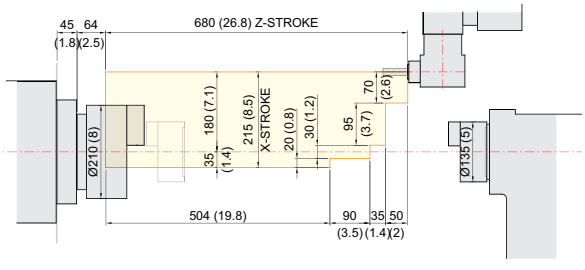

Face Tool holder

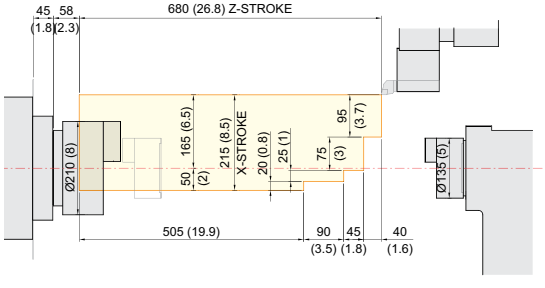

Sub Sp. Angular Mill Holder

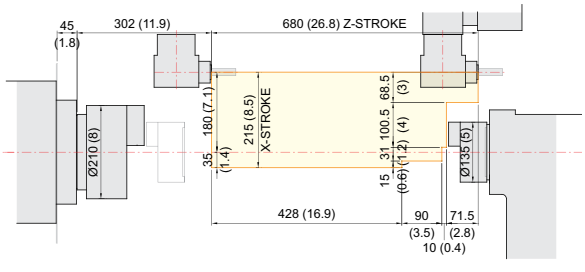

Tooling Travel Range

unit : mm(in)

HD2600Y

O.D. Tool holder

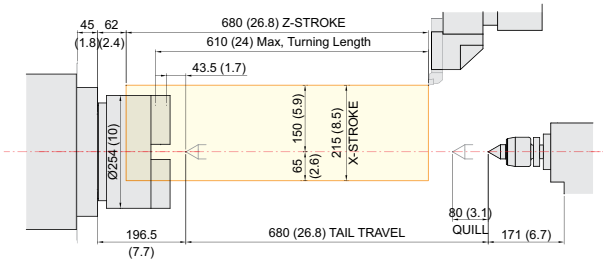

I.D. Tool holder

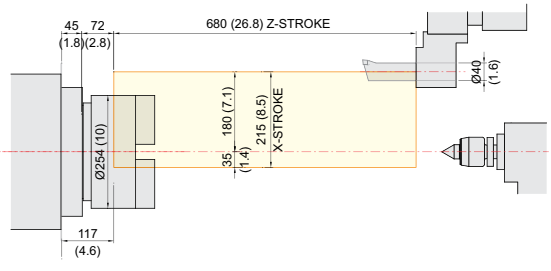

Straight Mill Holder

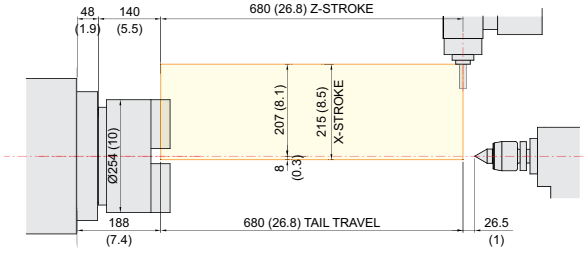

Angular Mill Holder

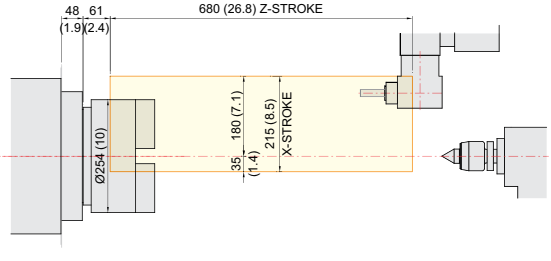

Face Tool holder

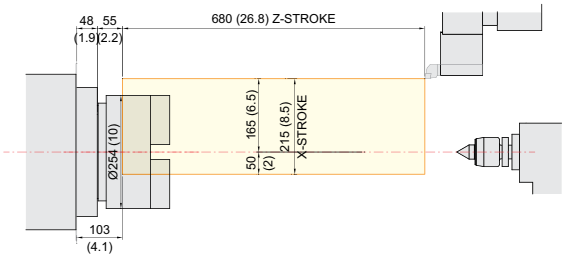

SPECIFICATIONS

Tooling Travel Range

unit : mm(in)

HD2600SY

O.D. Tool holder

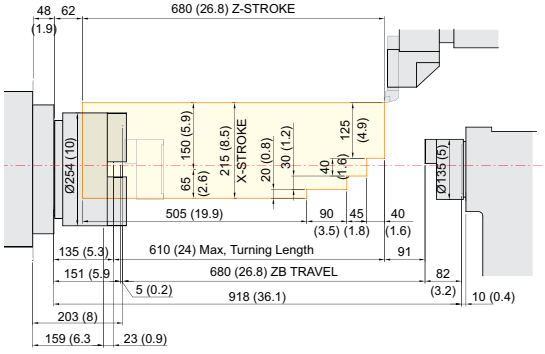

I.D. Tool holder

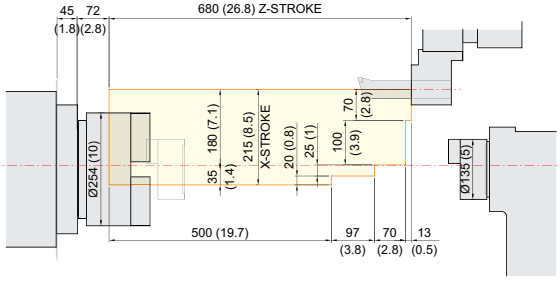

Straight Mill Holder

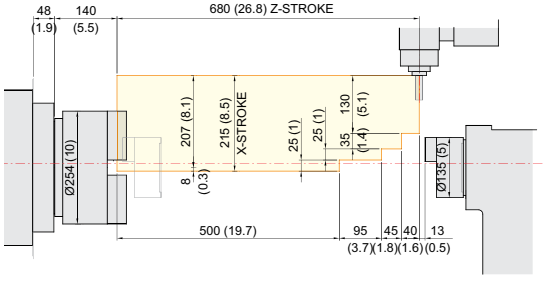

Angular Mill Holder

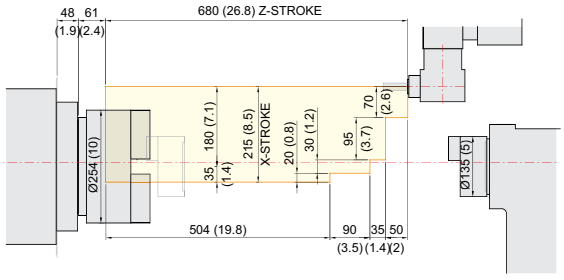

Face Tool holder

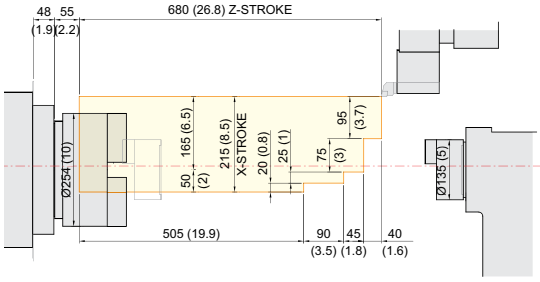

Sub Sp. Angular Mill Holder

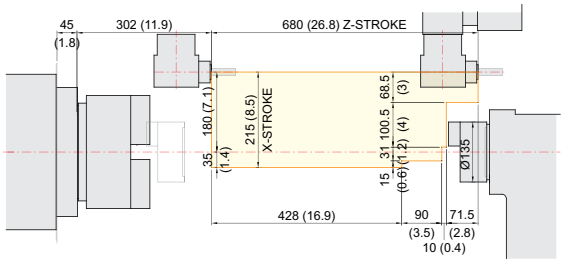

Tooling Travel Range

unit : mm(in)

HD3100YA

O.D. Tool holder

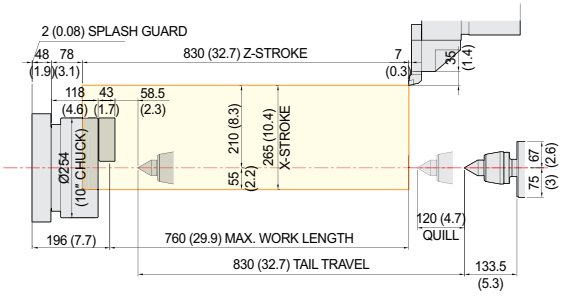

I.D. Tool holder

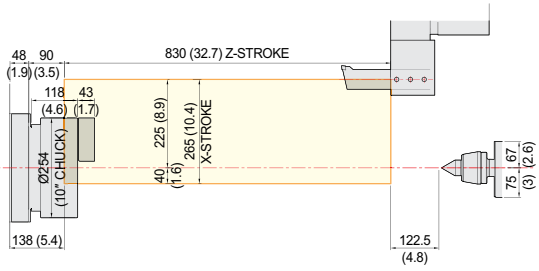

Axial driven Tool holder

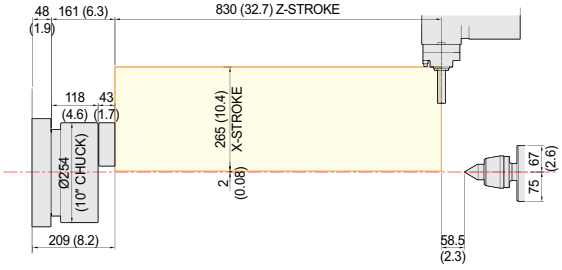

Angular driven Tool holder

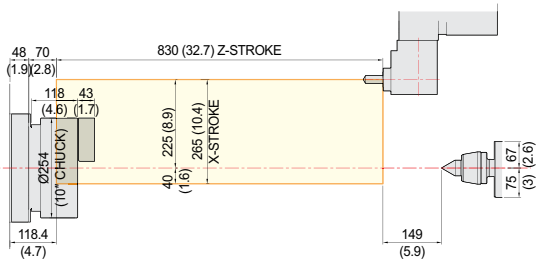

Face Tool holder

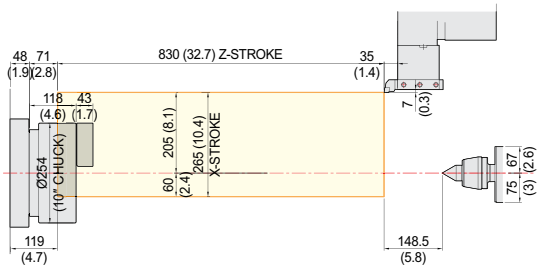

SPECIFICATIONS

Tooling Travel Range

unit : mm(in)

HD3100SYA

O.D. Tool holder

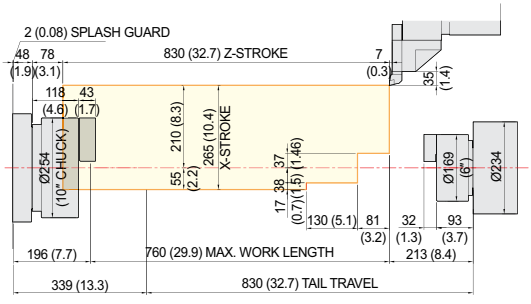

I.D. Tool holder

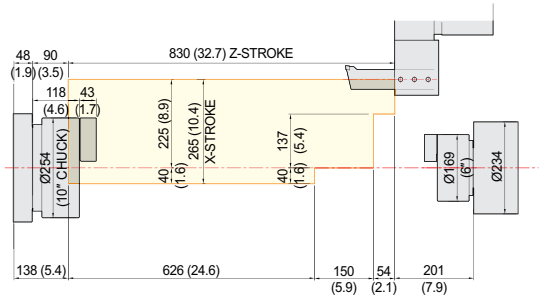

Axial driven Tool holder

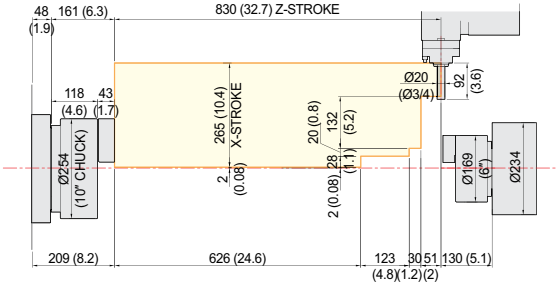

Angular driven Tool holder

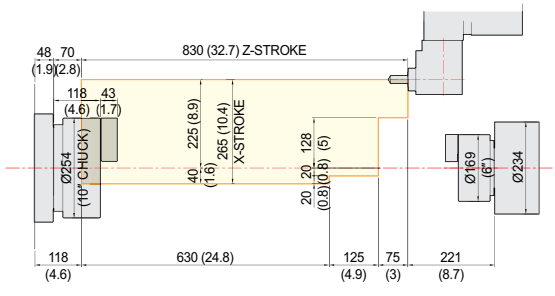

Face Tool holder

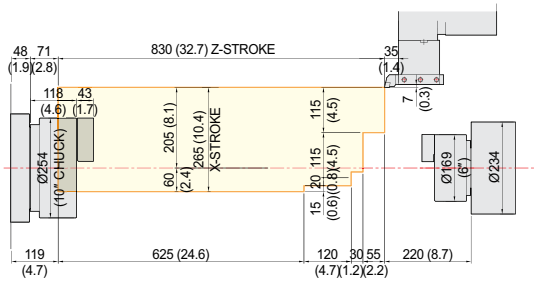

Tooling Travel Range

unit : mm(in)

HD3100Y

O.D. Tool holder

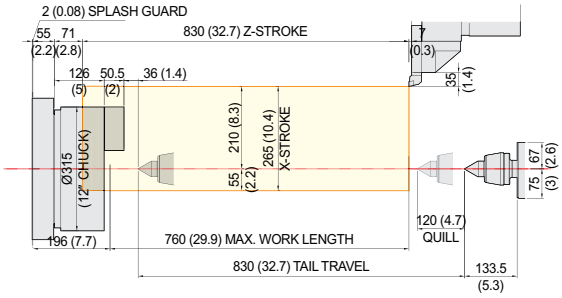

I.D. Tool holder

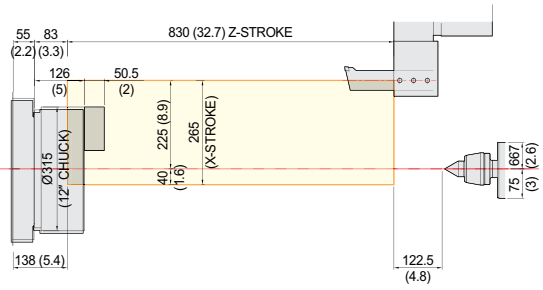

Axial driven Tool holder

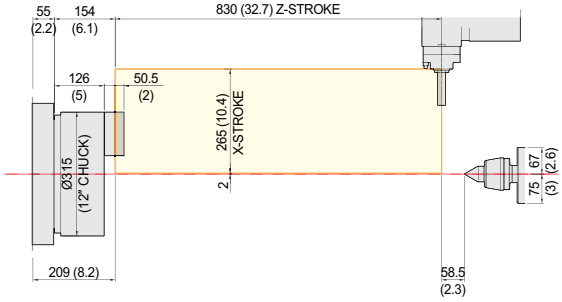

Angular driven Tool holder

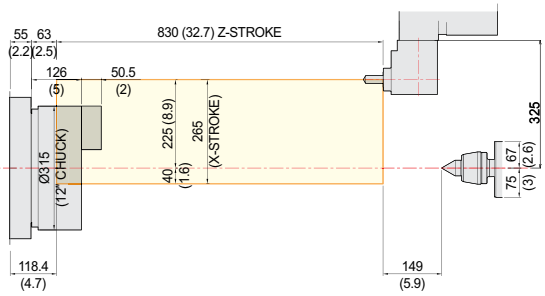

Face Tool holder

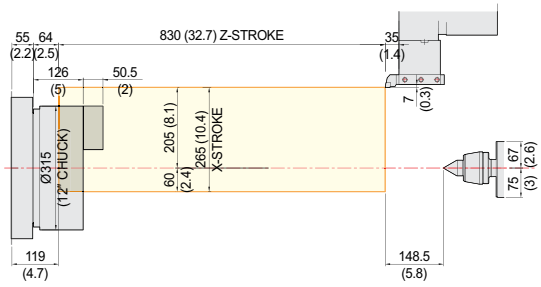

SPECIFICATIONS

Tooling Travel Range

unit : mm(in)

HD3100SY

O.D. Tool holder

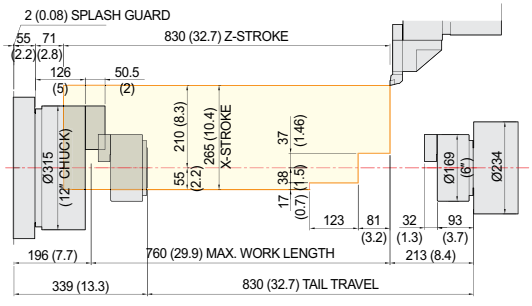

I.D. Tool holder

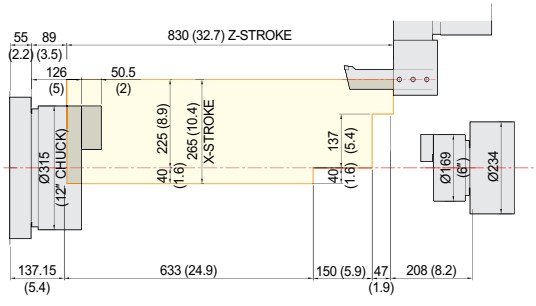

Axial driven Tool holder

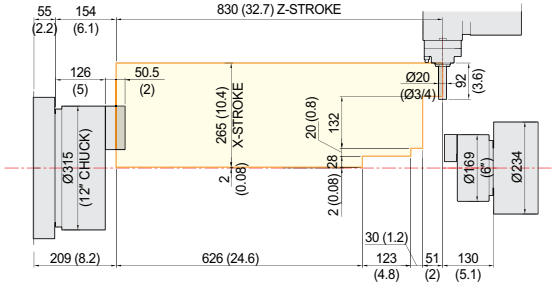

Angular driven Tool holder

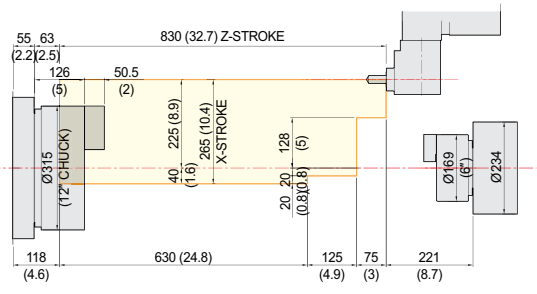

Face Tool holder

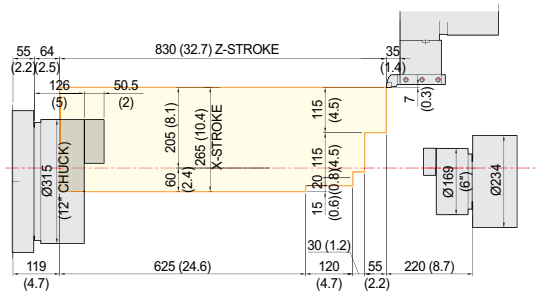

SPECIFICATIONS

Specifications

[ ] : Option

ITEM				HD2200Y	HD2200SY
CAPACITY	Swing Over the Bed		mm(in)	Ø820 (Ø32.3″)	
	Swing Over the Carriage		mm(in)	Ø650 (Ø25.6″)	
	Max. Turning Dia.		mm(in)	Ø300 (Ø11.8″)	
	Max. Turning Length		mm(in)	610 (24″)	
	Bar Capacity	Main	mm(in)	Ø65 (Ø2.6″)	
		Sub	mm(in)	–	Ø32 (Ø1.3″)
SPINDLE	Chuck Size	Main	inch	8″	
		Sub	inch	–	5″
	Spindle Bore	Main	mm(in)	Ø76 (Ø3″)	
		Sub	mm(in)	–	Ø43 (Ø1.7″)
	Spindle Speed (rpm)	Main	r/min	4,000 [4,000] [4,000]	
		Sub	r/min	–	6,000 [6,000]
	Motor (Max/Cont.)	Main	kW(HP)	18.5/15 (25/20) [18.5/15 (25/20)] [22.5/15 (30/20)]	
		Sub	kW(HP)	–	5.5/3.7 (7.4/5) [7.4/4.9 (9.9/6.6)]
	Torque (Max/Cont.)	Main	N·m	206.2/125.4 [353.5/215] [215/143.3]	
		Sub	N·m	–	46.6/23.5 [47/31.1]
	Spindle Type	Main	–	BELT	
		Sub	–	–	BELT
	Spindle Nose	Main	–	A2-6	
		Sub	mm(in)	–	FLAT Ø110 (4.3″)
	C-axis Indexing		deg	0.001°	
FEED	Travel	X/Y	mm(in)	215/110 {±55} (8.5″/4.3″{±2.17″})	
		Z/ZB	mm(in)	680 (26.8″)	680/680 (26.8″/26.8″)
	Rapid Traverse Rate	X/Y	m/min(ipm)	24/10 (944/394)	
		Z/ZB	m/min(ipm)	30 (1,181)	30/24 (1,181/994)
	Slide Type		–	BOX GUIDE	
TURRET	No. of Tools		ea	12 [24]	
	Tool Size	O.D	mm(in)	□25 (□1″) [24 Tool : □20 (□3/4″)]	
		I.D	mm(in)	Ø40 (Ø1.6″) [24T : SINGLE Ø40 (Ø1.6″), DOUBLE Ø20 (Ø0.8″), TRIPLE Ø20 (Ø0.8″)]	
	Indexing Time		sec/step	0.2	
	Y-Axis Type		–	WEDGE TYPE	
LIVE TOOL	Milling Tool Speed (rpm)		r/min	6,000 [6,000]	
	Motor (Max/Cont.)		kW(HP)	5.5/3.7 (7.4/5) [4.2/2.8 (5.6/4)]	
	Torque (Max/Cont.)		N·m	52.5/26.5 [40.1/26.8]	
	Collet Size		mm(in)	Ø16 (Ø5/8″) {ER25}	
	Type		–	BMT55	
TAIL STOCK	Taper		–	MT#4	–
	Quill Dia.		mm(in)	Ø80 (Ø3.1″)	–
	Quill Travel		mm(in)	120 (4.7″)	–
	Travel		mm(in)	680 (26.8″)	–
TANK CAPACITY	Coolant Tank		ℓ (gal)	200 (52.8)	
	Lubricating Tank		ℓ (gal)	2 (0.5)	
POWER SUPPLY	Electric Power Supply		kVA	27	32
	Thickness of Power Cable		mm^2	Over 25	
	Voltage		V/Hz	220/60 (200/50*)	
MACHINE	Floor Space (L×W)		mm(in)	3,380×1,800 (133.1″×70.9″)	
	Height		mm(in)	1,950 (76.8″)	
	Weight		kg(lb)	4,700 (10,362)	4,900 (10,803)
CNC	Controller		–	HYUNDAI WIA FANUC i Series – Smart Plus [SIEMENS 828D]	

*) Using 50Hz voltage instead of 60Hz may lower the output of motors. (excluding servo motors and inverter motors)

Specifications are subject to change without notice for improvement.

SPECIFICATIONS

Specifications

[ ] : Option

ITEM				HD2600Y	HD2600SY
CAPACITY	Swing Over the Bed		mm(in)	Ø820 (Ø32.3")	
	Swing Over the Carriage		mm(in)	Ø650 (Ø25.6")	
	Max. Turning Dia.		mm(in)	Ø300 (Ø11.8")	
	Max. Turning Length		mm(in)	610 (24")	
	Bar Capacity	Main	mm(in)	Ø81 (Ø3.2")	
		Sub	mm(in)	-	Ø32 (Ø1.3")
SPINDLE	Chuck Size	Main	inch	10"	
		Sub	inch	-	5"
	Spindle Bore	Main	mm(in)	Ø91 (Ø3.6")	
		Sub	mm(in)	-	Ø43 (Ø1.7")
	Spindle Speed (rpm)	Main	r/min	3,500 [3,500]	
		Sub	r/min	-	6,000 [6,000]
	Motor (Max/Cont.)	Main	kW(HP)	18.5/15 (25/20) [23.8/17 (31.9/22.8)]	
		Sub	kW(HP)	-	5.5/3.7 (7.4/5) [7.4/4.9 (9.9/6.6)]
	Torque (Max/Cont.)	Main	N·m	400.7/243.7 [679/357.4]	
		Sub	N·m	-	46.6/23.5 [47/31.1]
	Spindle Type	Main	-	BELT	
		Sub	-	-	BELT
	Spindle Nose	Main	-	A2-8	
		Sub	mm(in)	-	FLAT Ø110 (4.3")
	C-axis Indexing		deg	0.001°	
FEED	Travel	X/Y	mm(in)	215/110 {±55} (8.5"/4.3"{±2.17"})	
		Z/ZB	mm(in)	680 (26.8")	680/680 (26.8"/26.8")
	Rapid Traverse Rate	X/Y	m/min(ipm)	24/10 (944/394)	
		Z/ZB	m/min(ipm)	30 (1,181)	30/24 (1,181/994)
	Slide Type		-	BOX GUIDE	
TURRET	No. of Tools		ea	12 [24]	
	Tool Size	O.D	mm(in)	□25 (□1") [24 Tool : □20 (□3/4")]	
		I.D	mm(in)	Ø40 (Ø1.6") [24T : SINGLE Ø40 (Ø1.6"), DOUBLE Ø20 (Ø0.8"), TRIPLE Ø20 (Ø0.8")]	
	Indexing Time		sec/step	0.2	
	Y-Axis Type		-	WEDGE TYPE	
LIVE TOOL	Milling Tool Speed (rpm)		r/min	6,000 [6,000]	
	Motor (Max/Cont.)		kW(HP)	5.5/3.7 (7.4/5) [4.2/2.8 (5.6/4)]	
	Torque (Max/Cont.)		N·m	52.5/26.5 [40.1/26.8]	
	Collet Size		mm(in)	Ø16 (Ø5/8") {ER25}	
	Type		-	BMT55	
TAIL STOCK	Taper		-	MT#4	-
	Quill Dia.		mm(in)	Ø80 (Ø3.1")	-
	Quill Travel		mm(in)	120 (4.7")	-
	Travel		mm(in)	680 (26.8")	-
TANK CAPACITY	Coolant Tank		ℓ (gal)	200 (52.8)	
	Lubricating Tank		ℓ (gal)	2 (0.5)	
POWER SUPPLY	Electric Power Supply		kVA	27 [32]	32 [36]
	Thickness of Power Cable		mm^2	Over 25	
	Voltage		V/Hz	220/60 (200/50*)	
MACHINE	Floor Space (L×W)		mm(in)	3,380×1,800 (133.1"×70.9")	
	Height		mm(in)	1,950 (76.8")	
	Weight		kg(lb)	4,800 (10,582)	5,000 (11,023)
CNC	Controller		-	HYUNDAI WIA FANUC i Series - Smart Plus [SIEMENS 828D]	

*) Using 50Hz voltage instead of 60Hz may lower the output of motors. (excluding servo motors and inverter motors)

Specifications are subject to change without notice for improvement.

SPECIFICATIONS

Specifications

[ ] : Option

ITEM				HD3100YA	HD3100SYA	HD3100Y	HD3100SY
CAPACITY	Swing Over the Bed		mm(in)	Ø800 (Ø31.5″)			
	Swing Over the Carriage		mm(in)	Ø670 (Ø26.4″)			
	Max. Turning Dia.		mm(in)	Ø420 (Ø16.5″)			
	Max. Turning Length		mm(in)	760 (Ø29.9″)			
	Bar Capacity	Main	mm(in)	Ø81 (Ø3.2″)		Ø102 (Ø4″)	
		Sub	mm(in)	–	Ø51 (Ø2″)	–	Ø51 (Ø2″)
SPINDLE	Chuck Size	Main	inch	10″		12″	
		Sub	inch	–	6″	–	6″
	Spindle Bore	Main	mm(in)	Ø91 (Ø3.6″)		Ø115 (Ø4.5″)	
		Sub	mm(in)	–	Ø62 (Ø2.4″)	–	Ø62 (Ø2.4″)
	Spindle Speed (rpm)	Main	r/min	3,500		2,800	
		Sub	r/min	–	4,500	–	4,500
	Motor (Max/Cont.)	Main	kW(HP)	26/18.5 (35/25)		26/18.5 (35/25)	
		Sub	kW(HP)	–	7.5/5.5 (10/7.4)	–	7.5/5.5 (10/7.4)
	Torque (Max/Cont.)	Main	N·m	734/522		1,051/672	
		Sub	N·m	–	85/47	–	85/47
	Spindle Type	Main	–	BELT			
		Sub	–	–	BELT	–	BELT
	Spindle Nose	Main	–	A2-8		A2-11	
		Sub	mm(in)	–	A2-5	–	A2-5
	C-axis Indexing		deg	0.001°			
FEED	Travel	X/Y	mm(in)	265/120 {±60} (10.4″/4.7″{±2.4″})			
		Z/ZB	mm(in)	830 (32.7″)	830/830 (32.7″/32.7″)	830 (32.7″)	830/830 (32.7″/32.7″)
	Rapid Traverse Rate	X/Y	m/min(ipm)	24/10 (944/394)			
		Z/ZB	m/min(ipm)	30 (1,181)	30/30 (1,181/1,181)	30 (1,181)	30/30 (1,181/1,181)
	Slide Type		–	BOX GUIDE			
TURRET	No. of Tools		ea	12			
	Tool Size	O.D	mm(in)	□25 (□1″)			
		I.D	mm(in)	Ø50 (Ø2″)			
	Indexing Time		sec/step	0.2			
	Y-Axis Type		–	WEDGE TYPE			
LIVE TOOL	Milling Tool Speed (rpm)		r/min	5,000			
	Motor (Max/Cont.)		kW(HP)	5.5/3.7 (7.4/5)			
	Torque (Max/Cont.)		N·m	70/35.4			
	Collet Size		mm(in)	Ø25 (Ø1″) {ER32}			
	Type		–	BMT65P			
TAIL STOCK	Taper		–	MT#5	–	MT#5	–
	Quill Dia.		mm(in)	Ø100 (Ø3.9″)	–	Ø100 (Ø3.9″)	–
	Quill Travel		mm(in)	120 (4.7″)	–	120 (4.7″)	–
	Travel		mm(in)	830 (32.7″)	–	830 (32.7″)	–
TANK CAPACITY	Coolant Tank		ℓ (gal)	200 (52.8)			
	Lubricating Tank		ℓ (gal)	1.8			
POWER SUPPLY	Electric Power Supply		kVA	30	39	30	39
	Thickness of Power Cable		mm^2	Over 25			
	Voltage		V/Hz	220/60 (200/50*)			
MACHINE	Floor Space (L×W)		mm(in)	3,630×1,910 (142.9″×75.2″)			
	Height		mm(in)	1,960 (77.2″)			
	Weight		kg(lb)	6,200 (13,669)		6,300 (13,889)	
CNC	Controller		–	HYUNDAI WIA FANUC i Series – Smart Plus			

*) Using 50Hz voltage instead of 60Hz may lower the output of motors. (excluding servo motors and inverter motors)

Specifications are subject to change without notice for improvement.

CONTROLLER

HYUNDAI WIA FANUC i Series – Smart Plus

[ ] : Option

Controlled axis / Display / Accuracy Compensation	
Control axis	2 axis (X, Z) / 3 axis (X, Z, C) / 4 axis (X,Z,Y,C)
	5 axis (X, Z, B, C, A) / 6 axis (X, Z, Y, B, C, A)
	7 axis (X1/Z1, X2/Z2, B2, C1/C2)
Simultaneously controlled axis	2 axis [Max. 4 axis]
Designation of spindle axis	3 axis [Max. 4 axis]
Least setting Unit	X, Z, Y, B axis : 0.001 mm (0.0001 inch)
	C, A axis : 0.001 deg
Least input increment	X, Z, Y, B axis : 0.001 mm (0.0001 inch)
	C, A axis : 0.001 deg
Inch / Metric conversion	G20 / G21
High response vector control	
Interlock	All axis / Each axis
Machine lock	All axis
Backlash compensation	± 0~9999 pulses (exc.Rapid traverse / Cutting feed)
Position switch	
LCD / MDI	15 inch LCD unit (with Touch Panel)
Feedback	Absolute motor feedback
Stored stroke check 1	Over travel
Stored stroke check 2, 3	
PMC axis control	
Operation	
Automatic operation (Memory)	
MDI operation	
DNC operation	Needed DNC software / CF card
Program restart	
Wrong operation prevention	
Program check function	Dry run
Single block	
Search function	Program Number / Sequence Number
Interpolation functions	
Nano interpolation	
Positioning	G00
Linear interpolation	G01
Circular interpolation	G02, G03
Exact stop mode	Single : G09, Continuous : G61
Dwell	G04, 0 ~ 9999.9999 sec
Skip	G31
Reference position return	1st reference : G28, 2nd reference : G30
	Ref. position check : G27
Thread synchronous cutting	G33
Thread cutting retract	
Variable lead thread cutting	
Multi / Continuous threading	
Feed function / Acc. & Dec. control	
Manual feed	Rapid traverse
	Jog : 0~2,000 mm/min (79 ipm)
	Manual handle : x1, x10, x100 pulses
	Reference position return
Cutting Feed command	Direct input F code
Feedrate override	0 ~ 200% (10% Unit)
Rapid traverse override	1%, F25%, 50%, 100%
Override cancel	
Feed per minute	G98
Feed per revolution	G99
Look-ahead block	1 block
Program input	
Tape Code	EIA / ISO
Optional block skip	9 ea
Program stop / end	M00, M01 / M02, M30
Maximum command unit	± 999,999.999 mm (± 99,999.9999 inch)
Plane selection	X-Y : G17 / Z-X : G18 / Y-Z : G19
Workpiece coordinate system	G52, G53, 6 pairs (G54 ~ G59)
Manual absolute	Fixed ON
Programmable data input	G10
Sub program call	10 folds nested
Custom macro	#100 ~ #199, #500 ~ #999
G code system	A, B/C
Programmable mirror image	G51.1, G50.1
G code preventing buffering	G4.1
Direct drawing dimension program	Including Chamfering / Corner R
Conversational Program	Smart Guide-i

Program input	
Multiple repetitive cycles Ⅰ, Ⅱ	
Canned cycle for turning	
Auxiliary function / Spindle speed function	
Auxiliary function	M & 4 digit
Level-up M Code	High speed / Multi / Bypass M code
Spindle speed function	S & 5 digit , Binary output
Spindle override	0% ~ 150% (10% Unit)
Multi position spindle orientation	M19 (S##)
Rigid tapping	
Constant surface speed control	G96, G97
Tool function / Tool compensation	
Tool function	T & 2 digit + Offset 2 digit
Tool life management	
Tool offset pairs	128 pairs
Tool nose radius compensation	G40, G41, G42
Geometry / Wear compensation	
Direct input of offset measured B	
Editing function	
Part program storage size	5,120m (2MB)
No. of registerable programs	1,000 ea
Program protect	
Background editing	
Extended part program editing	Copy, move and change of NC program
Memory card program edit	
Data input / output & Interface	
I/O interface	CF card, USB memory
	Embedded Ethernet interface
Screen hard copy	
External message	
External key input	
External workpiece number search	
Automatic data backup	
Setting, display and diagnosis	
Self-diagnosis function	
History display & Operation	Alarm & Operator message & Operation
Run hour / Parts count display	
Maintenance information	
Actual cutting feedrate display	
Display of spindle speed / T code	
Graphic display	
Operating monitor screen	Spindle / Servo load etc.
Power consumption monitoring	Spindle & Servo
Spindle / Servo setting screen	
Multi language display	Support 24 languages
Display language switching	Selection of 5 optional Languages
LCD Screen Saver	Screen saver
Unexpected disturbance torque	BST (Back spin torque limit)
Function for machine type	
Cs contour control (C & A axis)	Mill, MS, Y, SY, LF-Mill, TTMS, TTSY
Polar coordinate interpolation	Mill, MS, Y, SY, LF-Mill, TTMS, TTSY
Cylindrical interpolation	Mill, MS, Y, SY, LF-Mill, TTMS, TTSY
Polygon turning (2 Spindles)	Mill, MS, Y, SY, LF-Mill, TTMS, TTSY
Canned cycle for drilling	Mill, MS, Y, SY, LF-Mill, TTMS, TTSY
Spindle orientation expansion	MS, SY TTS, TTMS, TTSY
Spindle synchronous control	MS, SY TTS, TTMS, TTSY
Torque control	MS, SY TTS, TTMS, TTSY
Y axis offset	Y, SY, TTSY
Arbitrary angular control	Y, SY, TTSY
Composite / Superimposed control	MS, SY, TTS, TTMS, TTSY
Balance cutting	TTS, TTMS, TTSY

Option	
Fast ethernet	Needed option board
Data server	Needed option board
Protection of data at 8 levels	
Tool offset pairs	200 pairs
Helical interpolation	
Optional block skip	40 ea, 200 ea (AICC Ⅱ)

Figures in inch are converted from metric values.
The FANUC controller specifications are subject to change based on the policy of company CNC supplying.

CONTROLLER

SIEMENS 828D

[ ] : Option ☆ Needed technical consultation

Controlled axis / Display / Accuracy Compensation	
Control axis	2 axis (X, Z) – Std.
	3 axis (X, Z, C) – Mill
	4 axis (X, Z, Y, C) – Y
	5 axis (X, Z, B, C, A) – MS
	6 axis (X, Z, Y, B, C, A) – SY
Simultaneously controlled axis	Max. 4 axis
Least setting Unit	X, Z, Y, B axis : 0.001 mm (0.0001 inch)
	C, A axis : 1 deg [0.001] deg
Least input increment	X, Z, Y, B axis : 0.001 mm (0.0001 inch)
	C, A axis : 1 deg [0.001] deg
Inch / Metric changeover	G70 (inch) / G71 (metric)
Interlock	All axis / Each axis
Backlash compensation	
Pitch error compensation	Leadscrew pitch errror compensation
LCD / MDI	10.4 inch color LCD
	[15 inch color LCD (With Touch panel)]
Keyboard	QWERTY full keyboard
Stored stroke check	Over travel
Operation	
Automatic operation	
MDI operation	
Program restart	
Program check function	Dry run / Program check / Machine lock
Single block	
Block search	Block search
Reposition	
Working area limit	Working area limitations
Interpolation functions	
Positioning	G00
Linear interpolation	G01
Circular interpolation	Circular interpolation CW (G02)
	Circular interpolation CCW (G03)
Exact position stop	Single block exact stop (G09)
	Exact stop G60 (G601, G602, G603)
Dwell	Dwell (G04)
Reference position return	Return to reference point
	Return to 2nd reference point
Helical interpolation	
Thread synchronous cutting	
Thread cutting retract	
Spline interpolation	Non-uniform rational B splines
Feed function / Acc. & Dec. control	
Manual feed	Rapid traverse
	Jog
	Manual handle
	Reference position return
Cutting feed command	Direct input F code
Feedrate override	0 ~ 200% (10% Unit)
Rapid traverse override	1%, 25%, 50%, 100%
Feed per minute	G94
Feed per revolution	G95
Look-ahead block	1 block
Program input	
ISO support	G291(ISO) / G290 (SIEMENS)
	(ISO G Code system-A)
Optional block skip	2
Program stop / end	M00, M01 / M02, M30
Maximum command unit	± 999,999.999 mm, ± 99,999.9999 inch
Plane selection	X-Y : G17, X-Z : G18, Y-Z : G19
Workpiece coordinate system	G54 ~ G57, G505~G549
	G500 (Basic frame - setable zero offset)
	G53 (Work offset non modal)
	G153 (basic frame non modal)
Sub program call	11 folds nested
G code preventing buffering	STOPRE
Turning cycle	Turning programing (Clycle 93 ,94, 95, 97)
User cycle	
3D simulation	
Real time simulation	
Shop Turn	Machining step programming for turning

Auxiliary function / Spindle speed function	
Auxiliary function	M Code 4 digit
Spindle speed function	S Code 5 digit
Spindle override	0% ~ 150% (10% Unit)
Spindle orientation	SPOS
Rigid tapping	
Autometic mode interchange	Spindle / Axis mode
Constant surface speed control	G96, G97
Spindle speed limitation	LIMS
Tool function / Tool compensation	
Tool function	Tool number & Tool name
	Tool : T + Offset : D
Tool life management	
Tools in tool list	128 ea : Std.
	256 ea : Mill
	768 ea : Y, MS, SY
Cutting Edges in tool list	256 ea : Std.
	512 ea : Mill
	1,536 ea : Y, MS, SY
Tool nose radius compensation	ISO (G40, G41, G42)
Geometry / Wear compensation	
Measurement of tool length	
Tool management function	
Editing function	
Part program storage size	3MB – Std.
	5MB – Mill
	10MB – Y, MS, SY
No. of registerable programs	750 ea
External Strorage devices	Local network, Server, USB, Flash drive
Background editing	
Extended part program editing	Copy, move and change of NC program
Memory card program edit	
Data input / output & Interface	
I/O interface	CF card interface (ONLY 10.4")
	USB memory interface
	Embedded Ethernet memory interface
Screenshot	
Setting, display and diagnosis	
Self-diagnosis function	
History display & Operation	Alarm & Operator message & Operation
Run hour / Parts count display	
Maintenance information	
Actual cutting feedrate display	
Display of spindle speed / T code	
Graphic display	
Operating monitor screen	Spindle / Servo load etc.
Multi language display	Support 9 languages
	Chinese (Simplified/Traditional), English, French, German, Italian, Korean, Portuguese, Spanish
	[☆ Support 22 languages : Inquiry need]
LCD Screen Saver	Screen saver & Motion sensing
Function for machine type	
Cs contour control (C & A axis)	Mill, MS, Y, SY model
Polar coordinate interpolation	Mill, MS, Y, SY model
Cylindrical interpolation	Mill, MS, Y, SY model
Canned cycle for drilling	Mill, MS, Y, SY model
[Polygon turning (CP-Basic)]	Mill, MS, Y, SY model
[Hobbing / Skybing (CP-Comfort)]	Mill, MS, Y, SY model
Spindle synchronous control	MS, SY model
Servo tailstock function	MS, SY model

Option	
Additional optional block skip	10
Contour handwheel	

Figures in inch are converted from metric values. | Specifications are subject to change without notice for improvement.

HYUNDAI WIA

YouTube HYUNDAI WIA MT
www.youtube.com/HYUNDAIWIAMT

CREATING VALUE IN SEAMLESS MOBILITY

With its top-quality HYUNDAI WIA machine tool creates a new and better world.

http://machine.hyundai-wia.com
HYUNDAI WIA Machine Tools
Global Links

HEADQUARTER

R&D Center/Factory 153, Jeongdong-ro, Seongsan-gu, Changwon-si, Gyeongsangnam-do, Korea **TEL** : +82 55 280 9114 **FAX** : +82 55 282 9114

Overseas Sales Team /R&D Center 37, Cheoldobangmulgwan-ro, Uiwang-si, Gyeonggi-do, Korea **TEL** : +82 31 8090 2539

OVERSEAS OFFICES

HYUNDAI WIA Machine America corp. 450 Commerce Blvd, Carlstadt, NJ 07072, USA **TEL** : +1-201-987-7298

HYUNDAI WIA Europe GmbH Alexander-Fleming-Ring 57, 65428 Rüsselsheim Germany **TEL** : +49-0-6142-9256-0

HYUNDAI WIA Machine Tools China Company No.16 Fenghuang Road, Fenghuang Town, Zhangjiagang City, Jiangsu Province, China **TEL** : +86-21-6427-9885

India Branch Office #4/169, 1st Floor, LOTTE BLDG, Rajiv Gandhi Salai, (OMR), Kandanchavadi, Chennai - 600096, Tamilnadu, India **TEL** : +91-76-0490-3348

2024-02 002.018 ENG